WORTHINGTON, SKILLING, HELLE & JACKSON — Civil & Structural Engineers

PROJECT: THE WORLD TRADE CENTER | TITLE: CONNECTION DETAIL 288 A | DATE: 5-22-67

REVISIONS

10-2-67

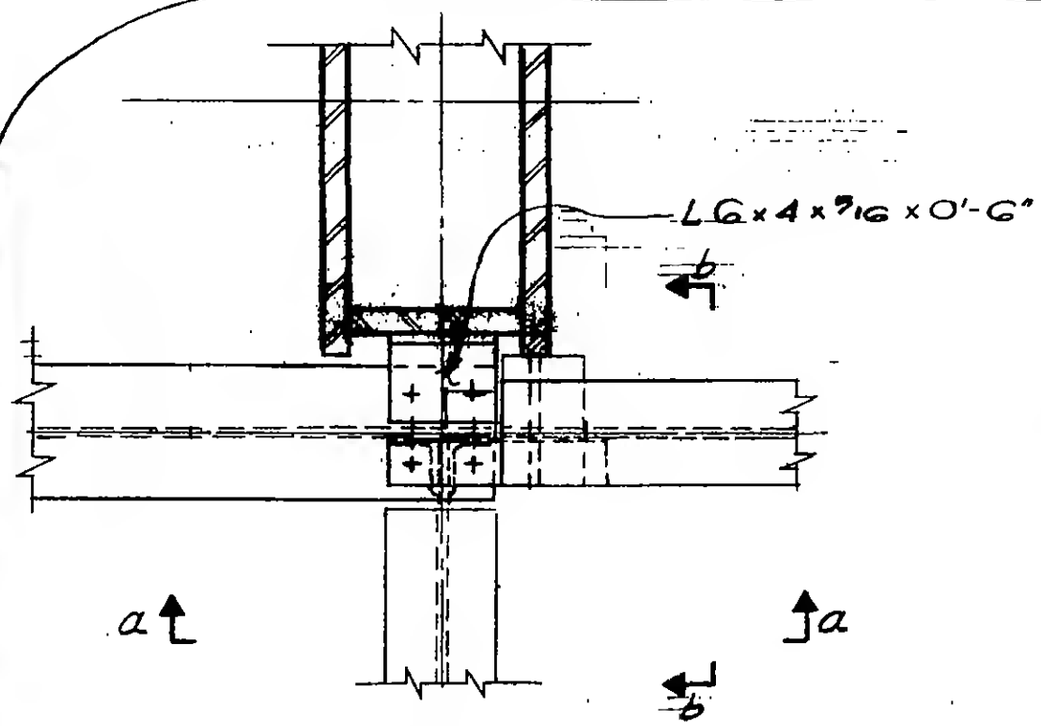

Plan

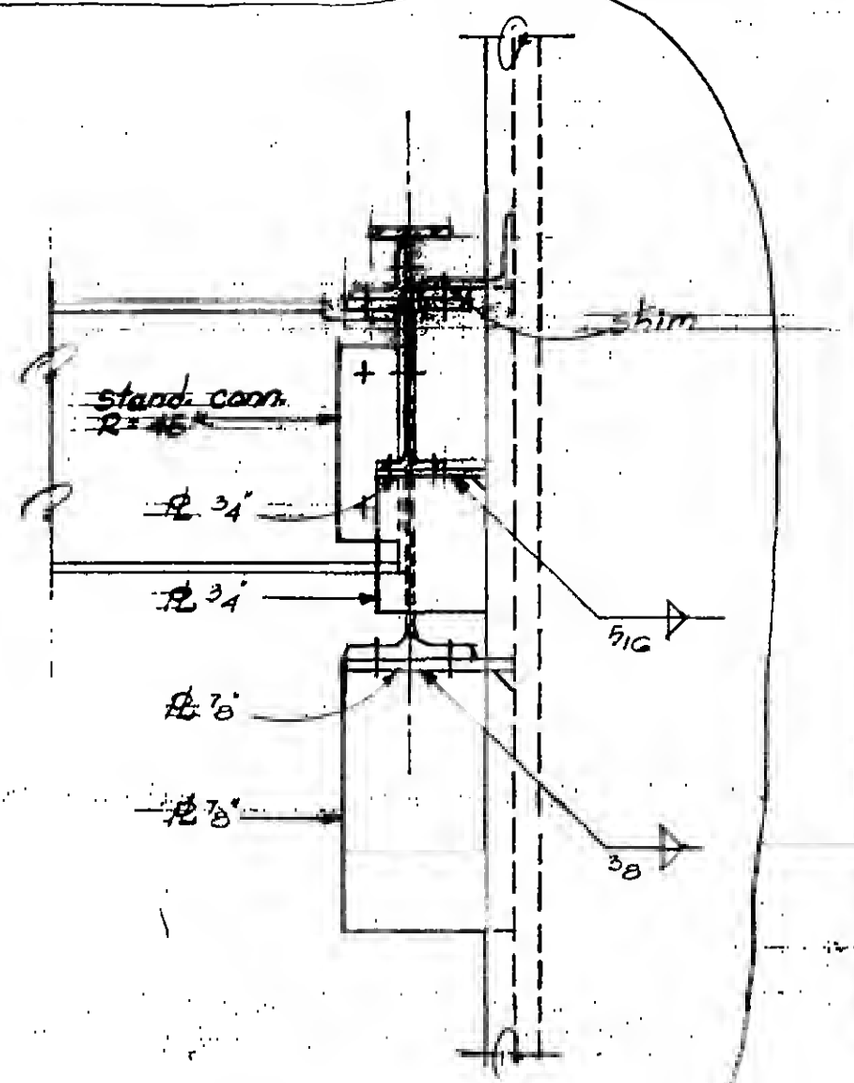

Section b-b

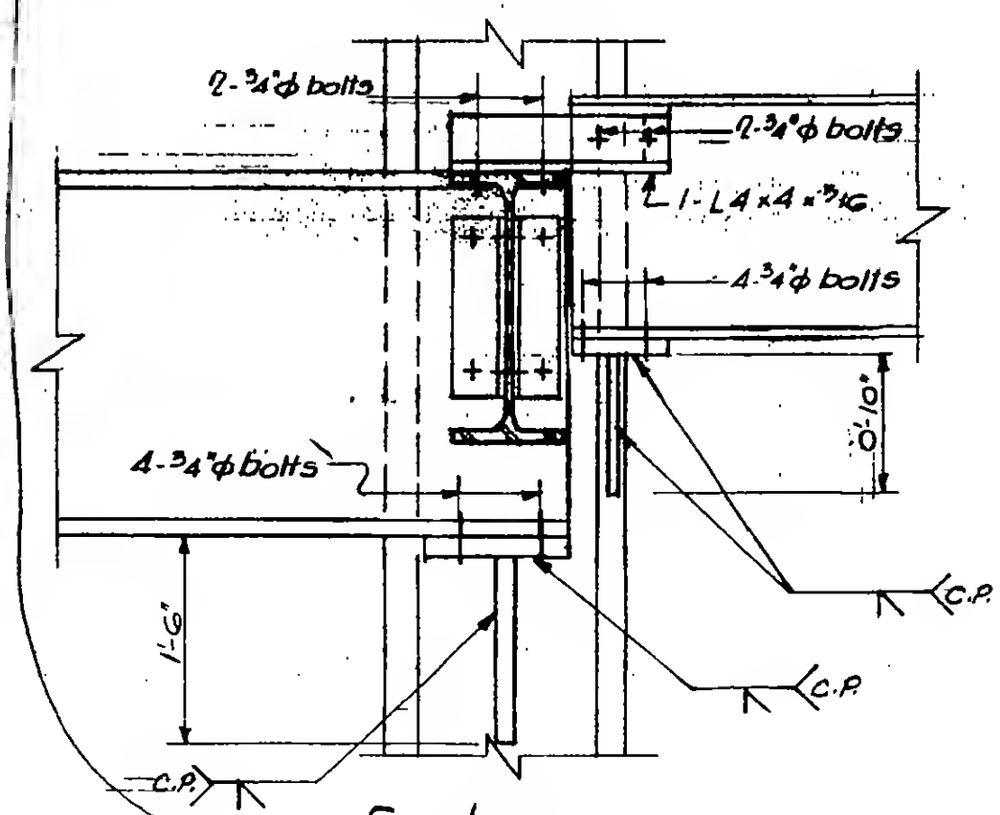

Section a-a

LICENSED PROFESSIONAL ENGINEER
LESLIE E. ROBERTSON
No. 34360
UNIVERSITY OF THE STATE OF NEW YORK

6-AB1-95