SKILLING - HELLE - CHRISTIANSEN - ROBERTSON — Structural & Civil Engineers

PROJECT THE WORLD TRADE CENTER | TITLE CONNECTION DETAILS | DATE 4-30-67

REVISIONS

10-5-67

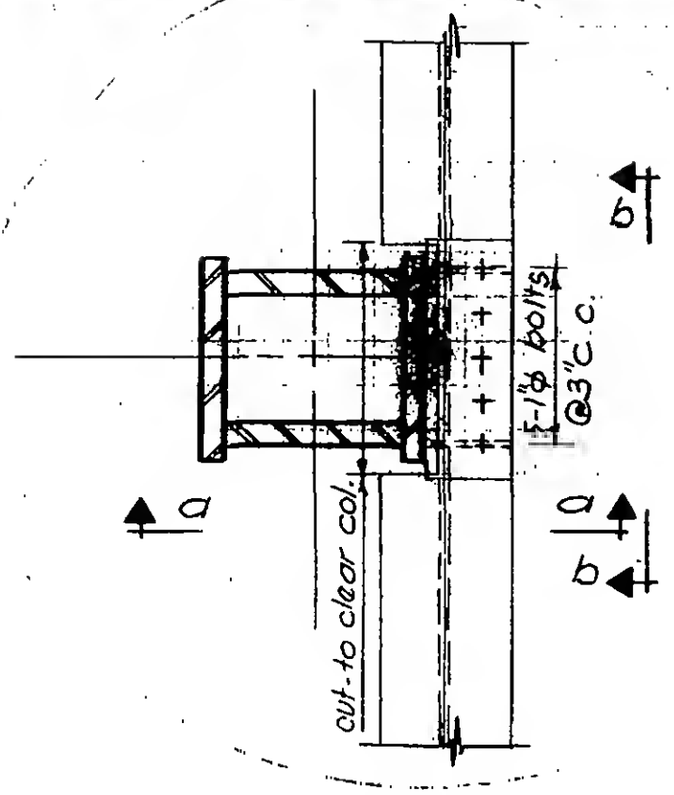


Plan

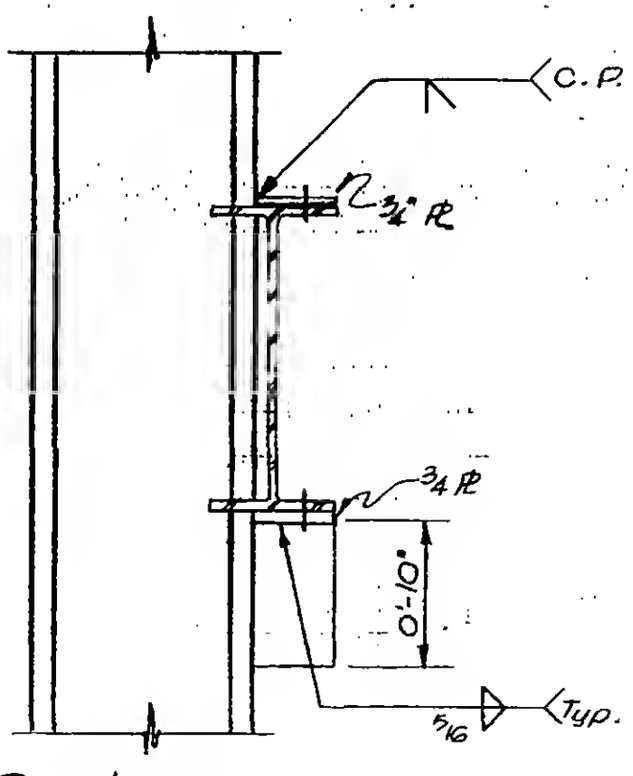


Section a-a

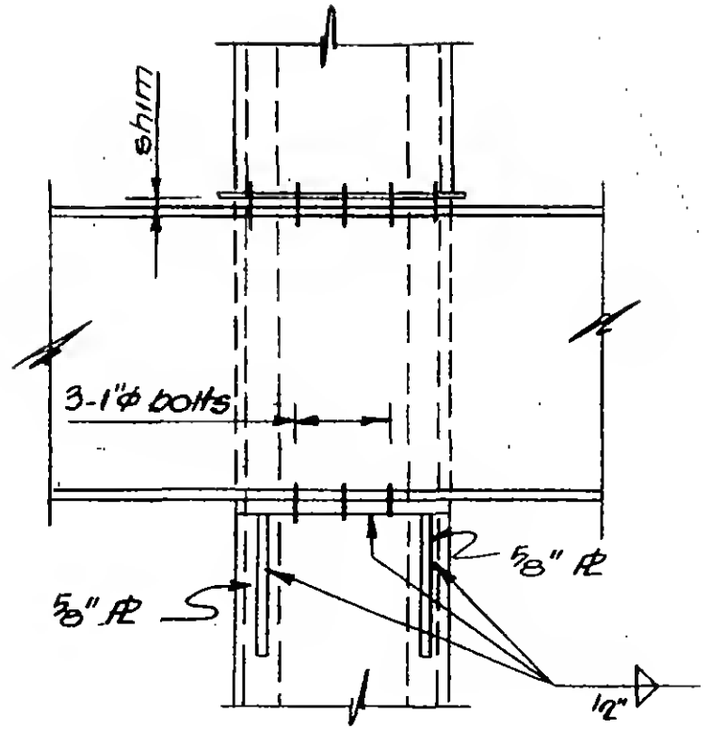


Section b-b

6-AB1-100