SKILLING - HELLE - CHRISTIANSEN - ROBERTSON  Structural & Civil Engineers

PROJECT THE WORLD TRADE CENTER | TITLE CONNECTION DETAIL 296 D | DATE 10-5-67

REVISIONS

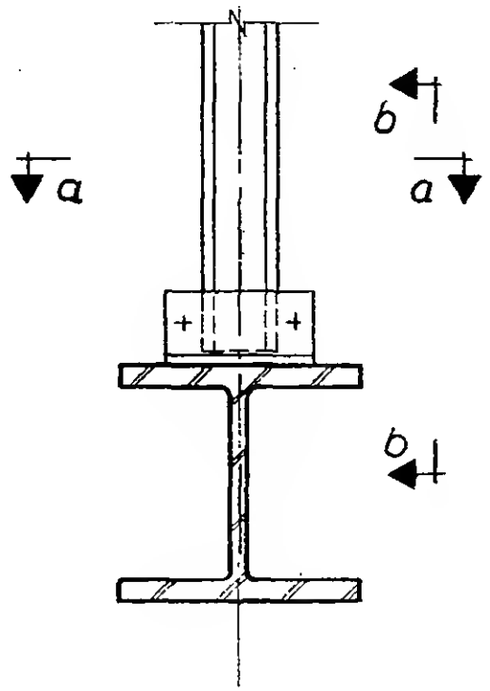


Plan

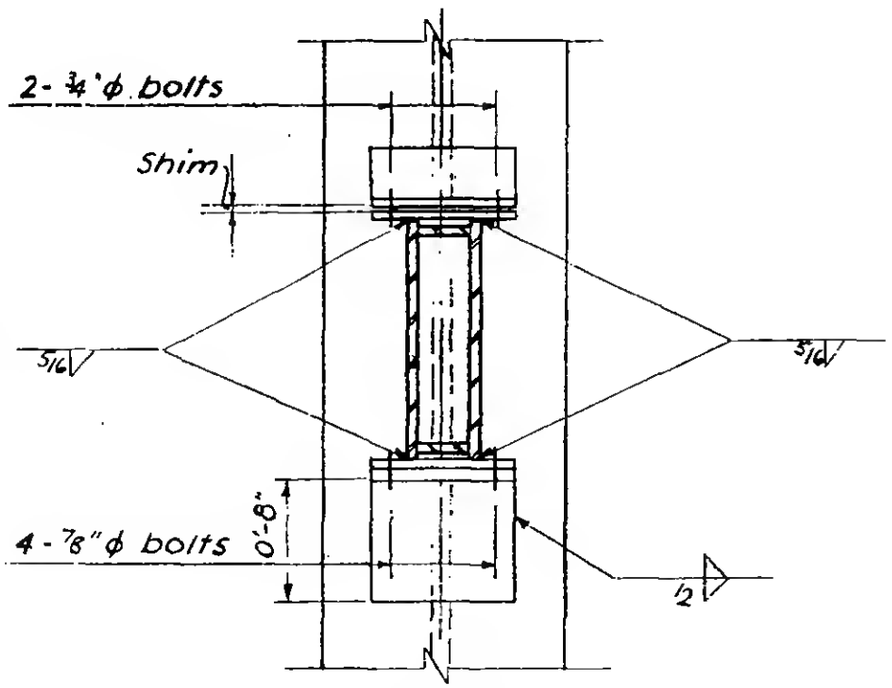


Section a-a

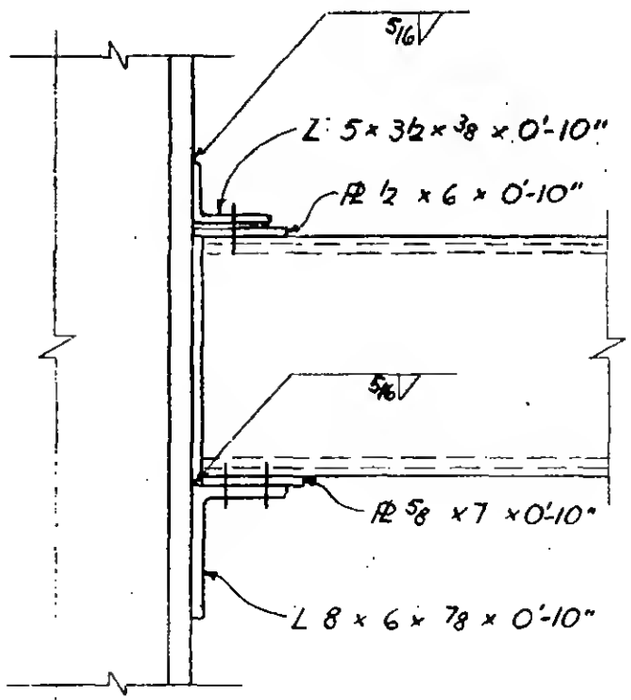


Section b-b

LICENSED PROFESSIONAL ENGINEER
LESLIE E. ROBERTSON
No. 34360
UNIVERSITY OF THE STATE OF NEW YORK

6-AB1-103.1