WORTHINGTON, SKILLING, HELLE & JACKSON — Civil & Structural Engineers

PROJECT: THE WORLD TRADE CENTER | TITLE: CONNECTION DETAIL 300 | DATE: 7/20/67

REVISIONS

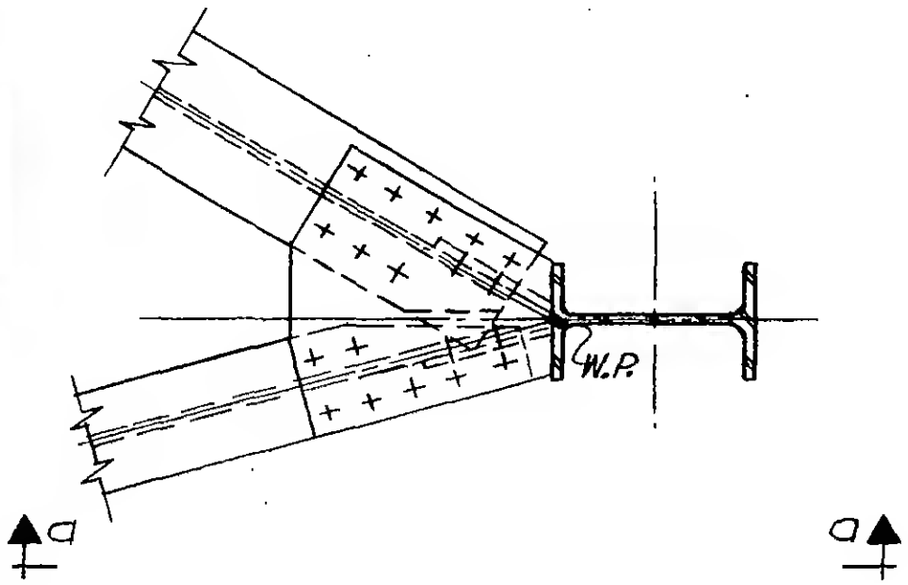

PLAN

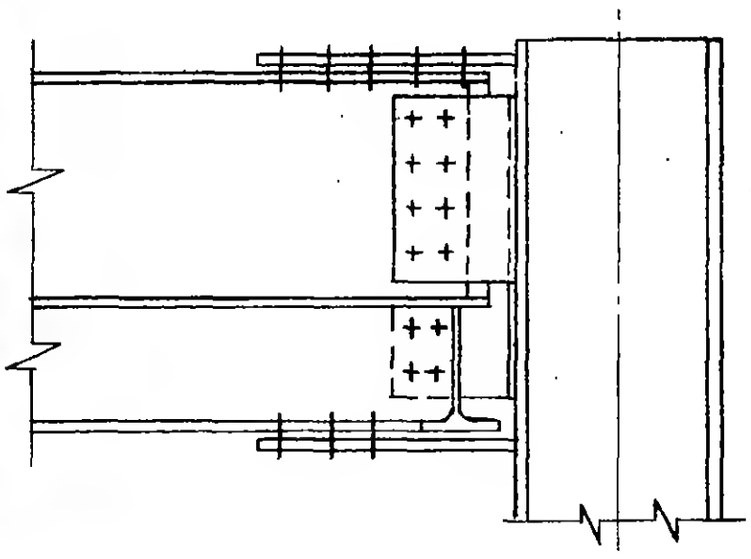

Section a-a

LICENSED PROFESSIONAL ENGINEER LESLIE E. ROBERTSON

6-AB1-107