WORTHINGTON, SKILLING, HELLE & JACKSON — Civil & Structural Engineers

PROJECT: THE WORLD TRADE CENTER | TITLE: CONNECTION DETAIL 303 A,B | DATE: 6-5-67

REVISIONS

-28-67
9-15-67
11-10-67
12-8-67

Use Alt. for beam no. 2186 on Secondary Level above floor 33 Tower A at col. 601

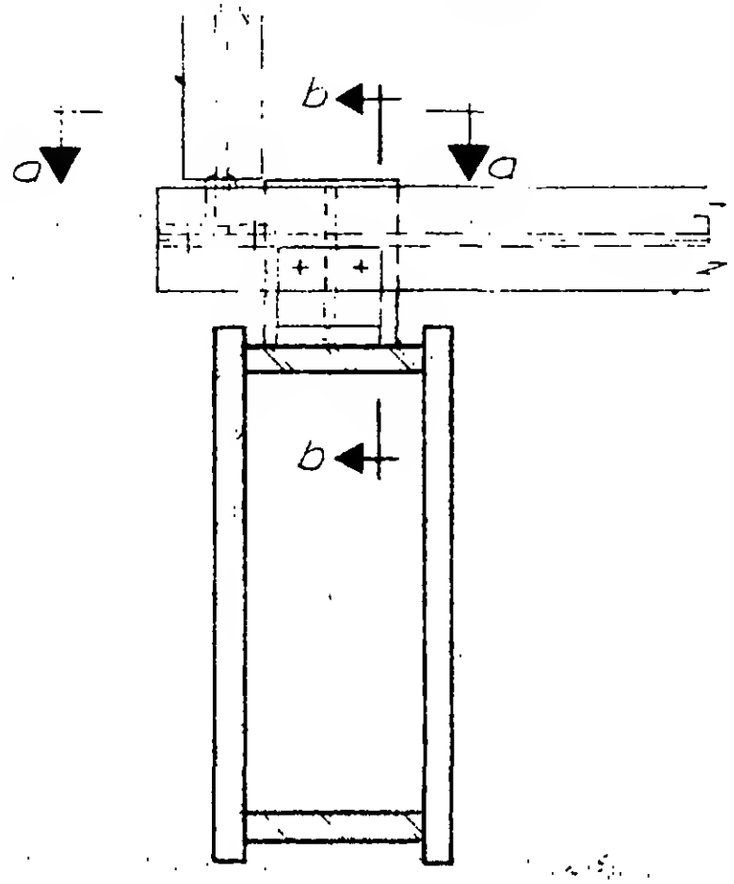

Plan

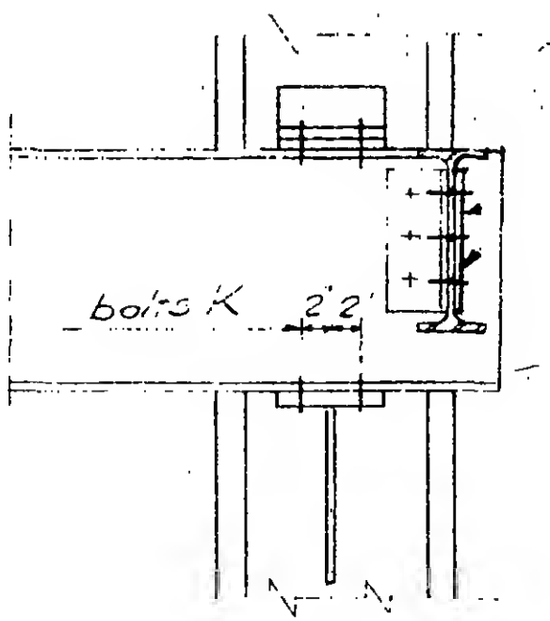

Section a-a

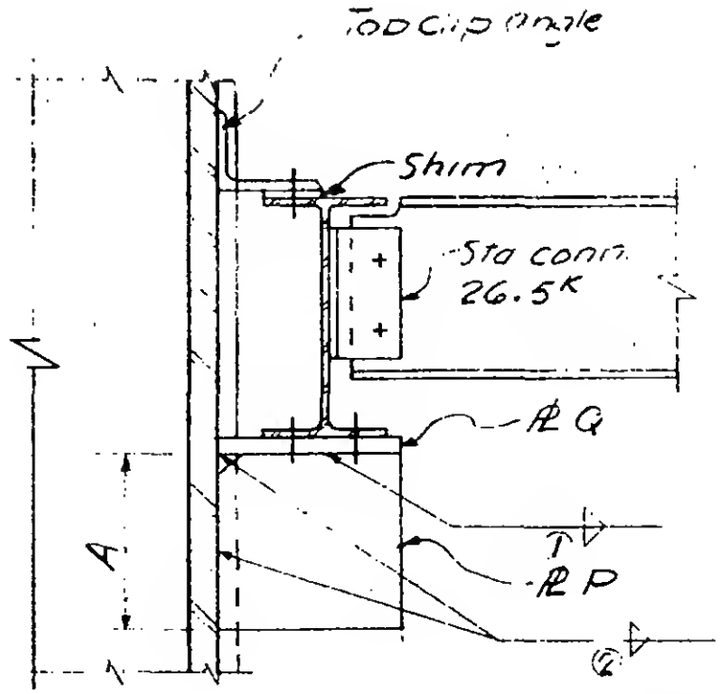

Section b-b

6-ABI-110 Alt.

LICENSED PROFESSIONAL ENGINEER
LESLIE E. ROBERTSON
No. 34360
STATE OF NEW YORK