SKILLING - HELLE - CHRISTIANSEN - ROBERTSON Structural & Civil Engineers

PROJECT THE WORLD TRADE CENTER | TITLE CONNECTION DETAIL 308 A | DATE 6-5-67

REVISIONS
9-15-67
11-10-67

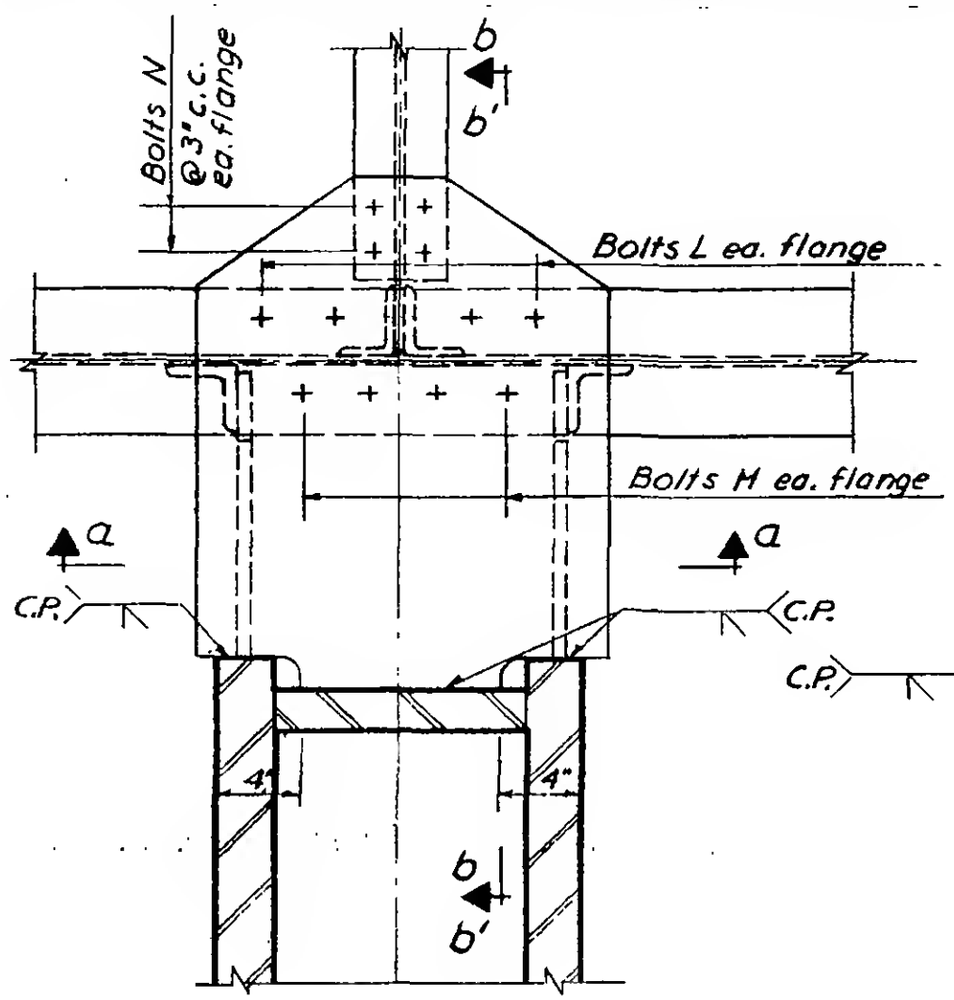

Plan

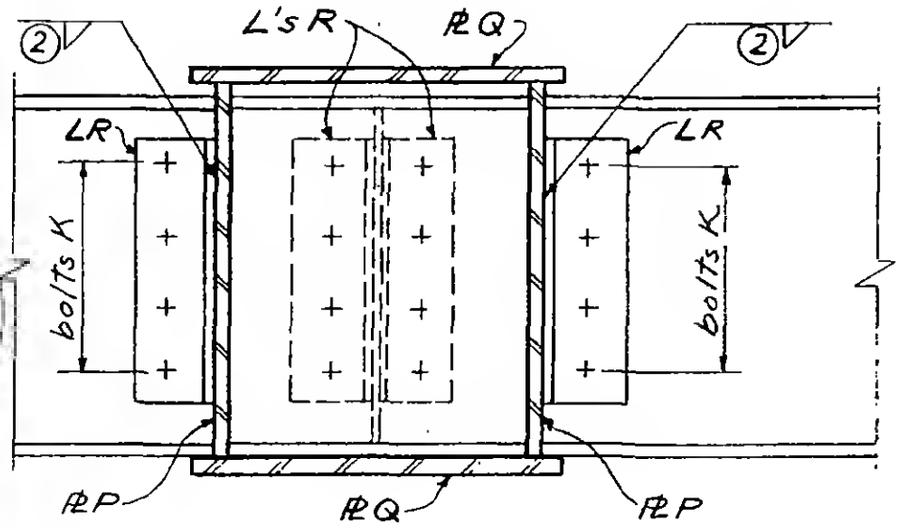

Section a-a

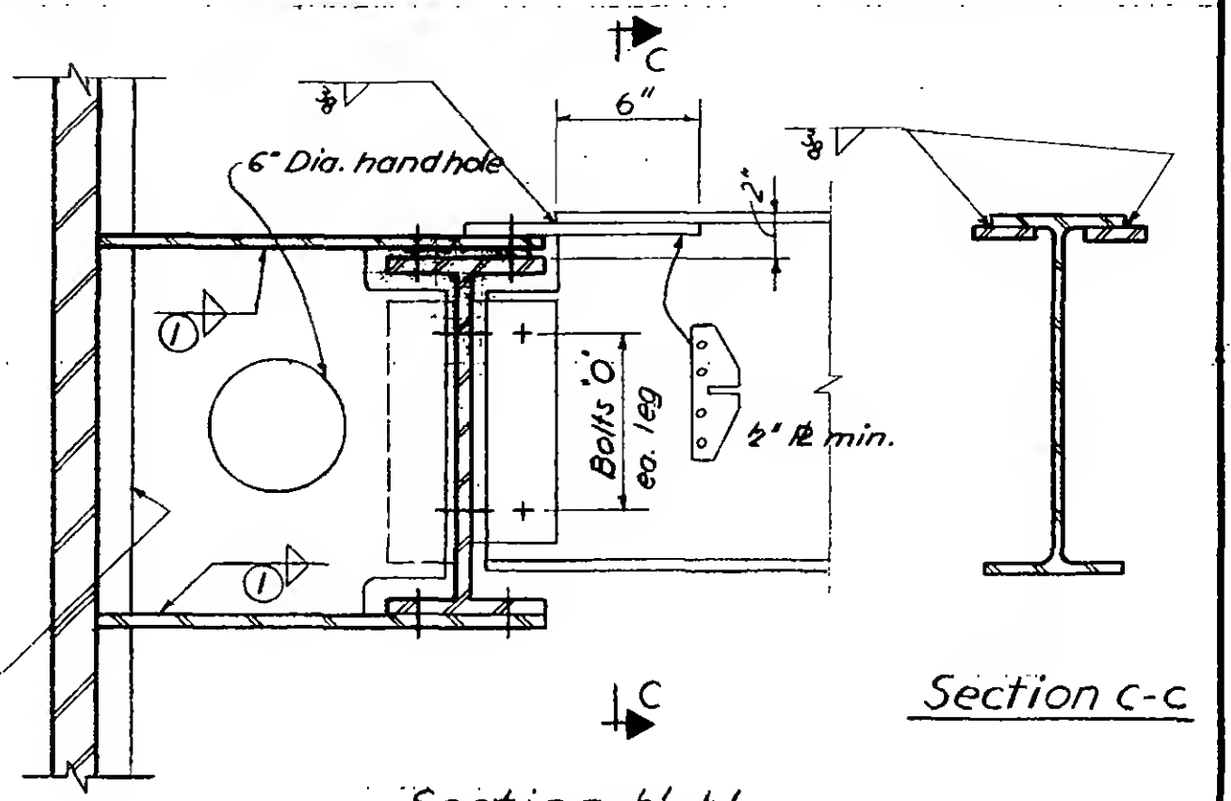

Section c-c

Section b'-b'
for beams at different elevations

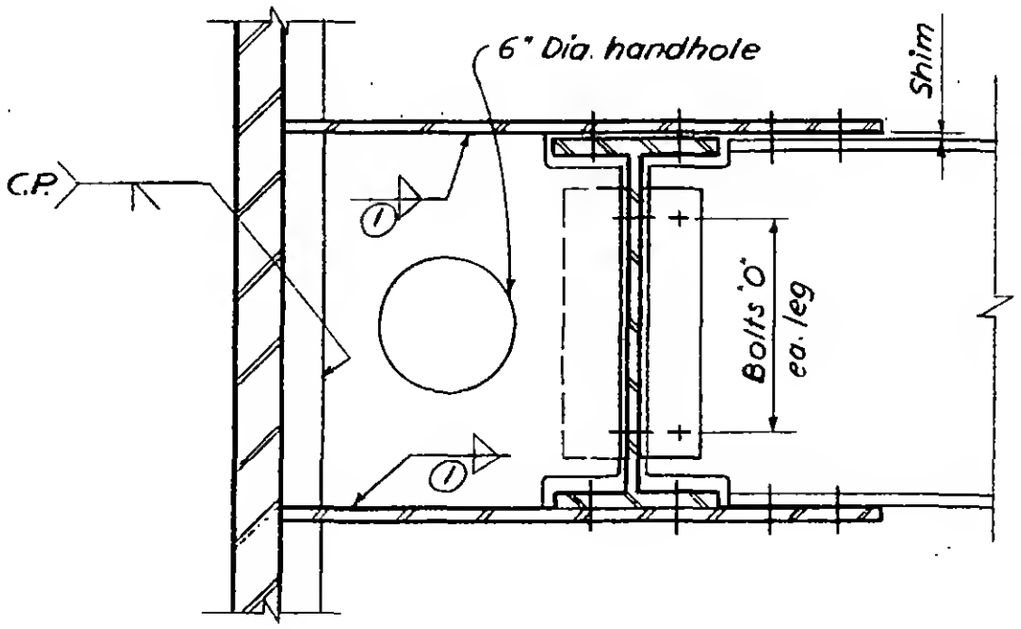

Section b-b
Beams at same elevation

LICENSED PROFESSIONAL ENGINEER
LESLIE E. ROBERTSON
No. 34360
UNIVERSITY OF THE STATE OF NEW YORK

6-ABI-115