SKILLING - HELLE - CHRISTIANSEN - ROBERTSON — Structural & Civil Engineers

PROJECT: THE WORLD TRADE CENTER | TITLE: CONNECTION DETAIL 313 A,B,C,D,E,F | DATE: 6-5-67

REVISIONS
9-15-67
10-2-67
10-5-67

WTCI-21-LERA

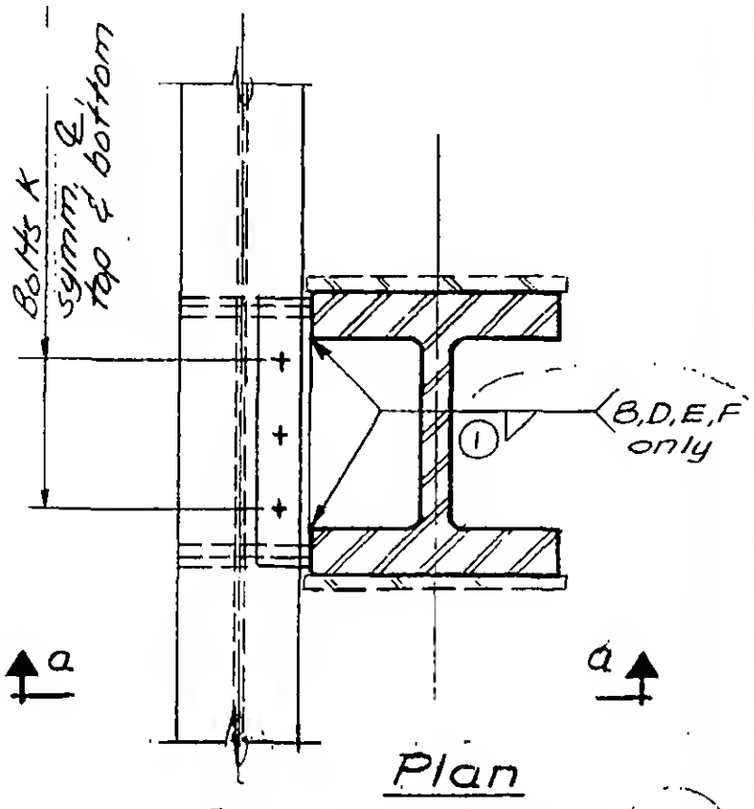

Plan
Details 313 A,B,D,E,F

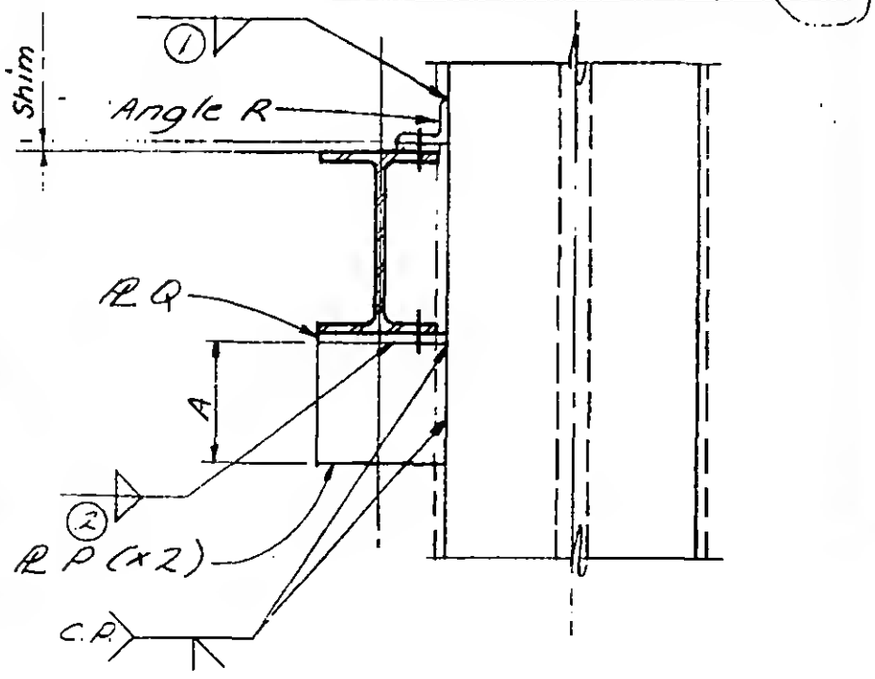

Section a-a

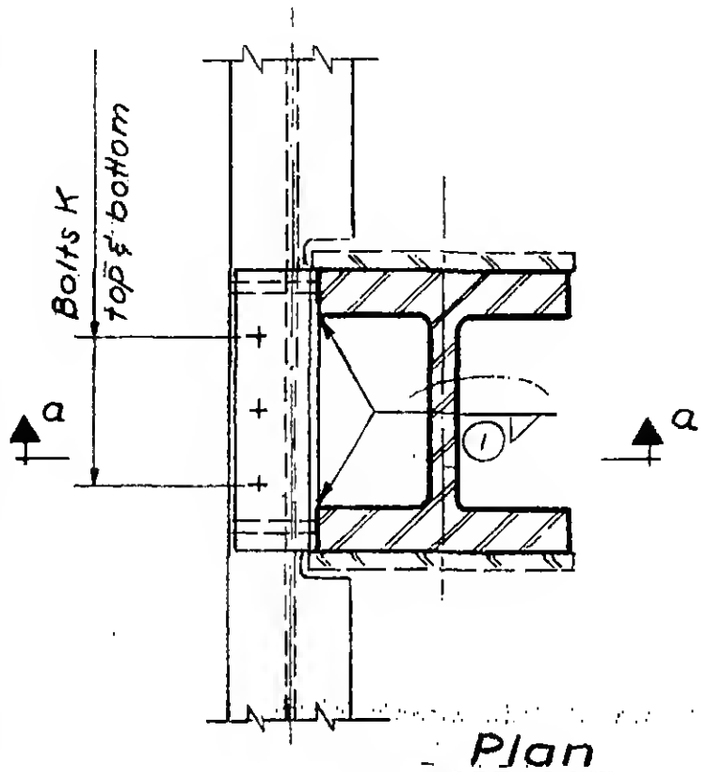

Plan
Detail 313 C

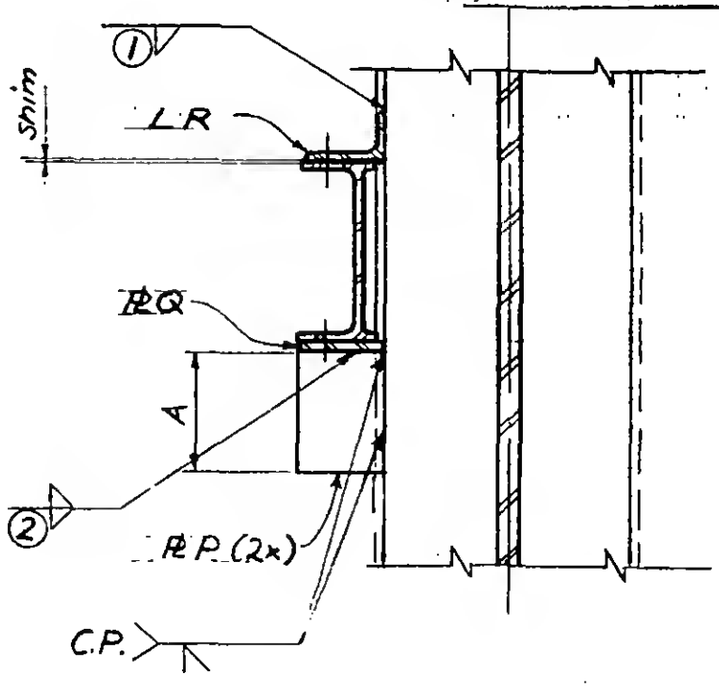

Section a-a

6-AB1-120