WORTHINGTON, SKILLING, HELLE & JACKSON : Civil & Structural Engineers

PROJECT THE WORLD TRADE CENTER | TITLE CONNECTION DETAIL 328A | DATE 7/14/67

REVISIONS

8-5-67

9-29-67

11-14-67

12-21-67

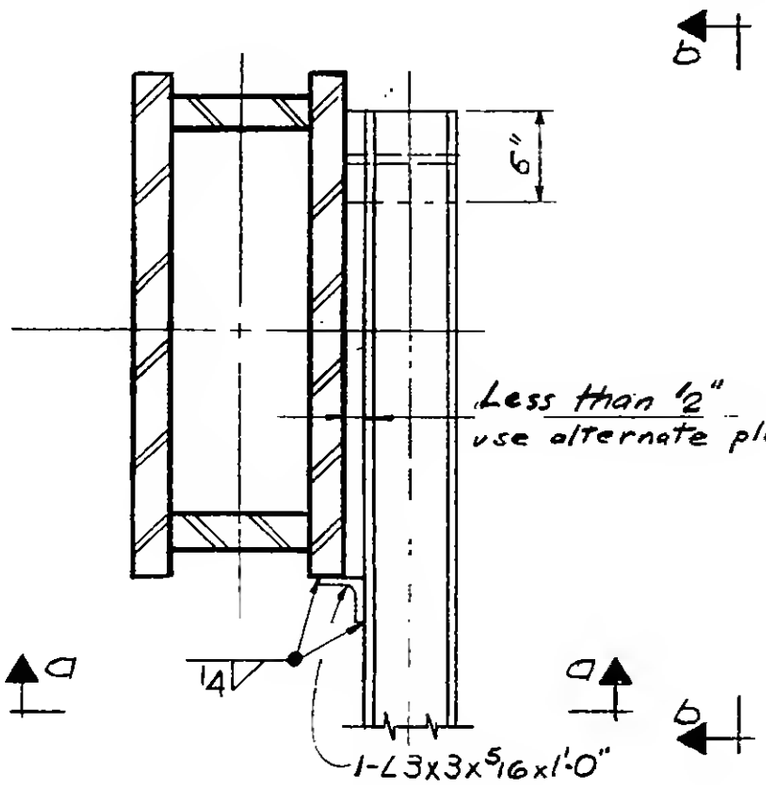

Plan

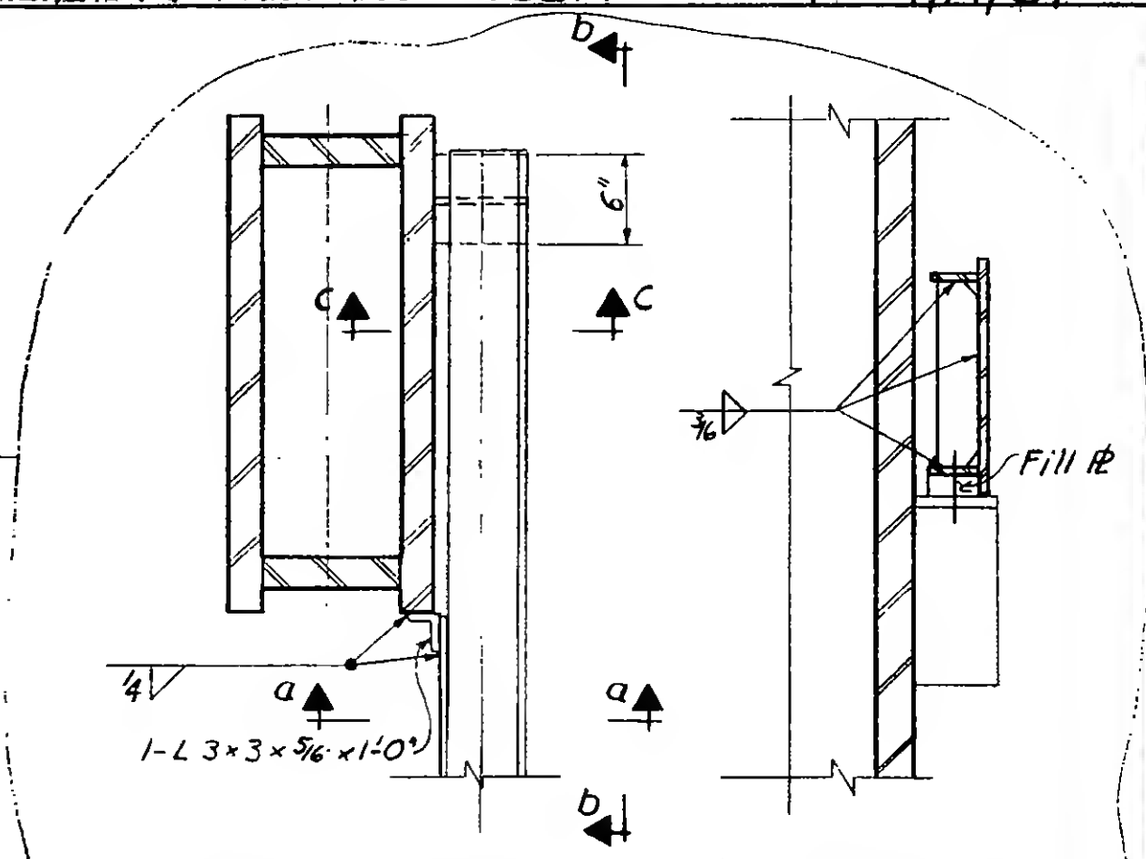

Alternate Plan

Section c-c

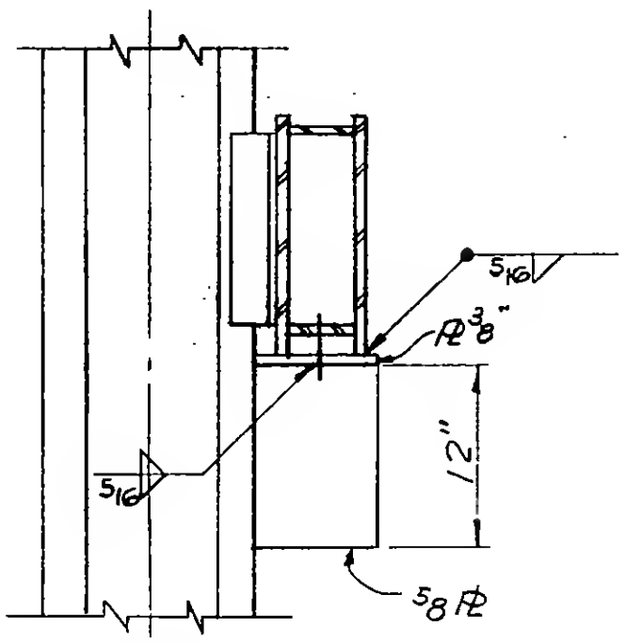

Section a-a

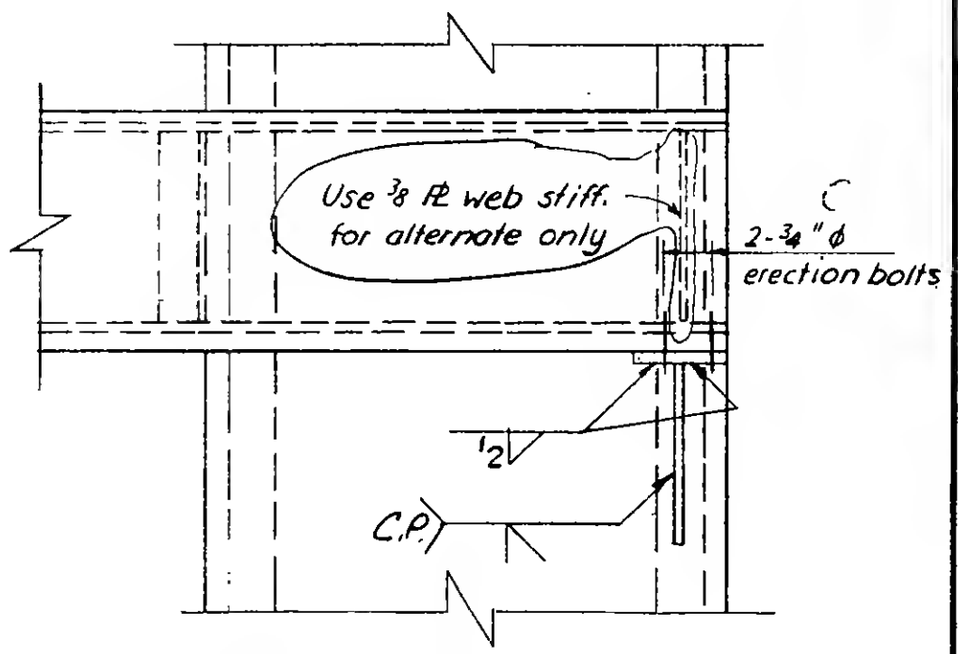

Section b-b

G-ABI-135

LICENSED PROFESSIONAL ENGINEER
LESLIE E. ROBERTSON
No. 34560
NEW YORK
UNIVERSITY OF THE STATE