SKILLING - HELLE - CHRISTIANSEN - ROBERTSON Structural & Civil Engineers

PROJECT THE WORLD TRADE CENTER | TITLE CONNECTION DETAIL 332 A | DATE 7-14-67

REVISIONS

-5-67

11-16-67

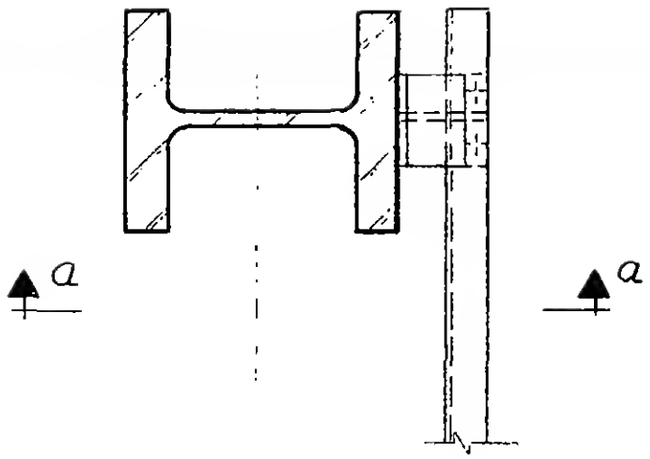

Plan

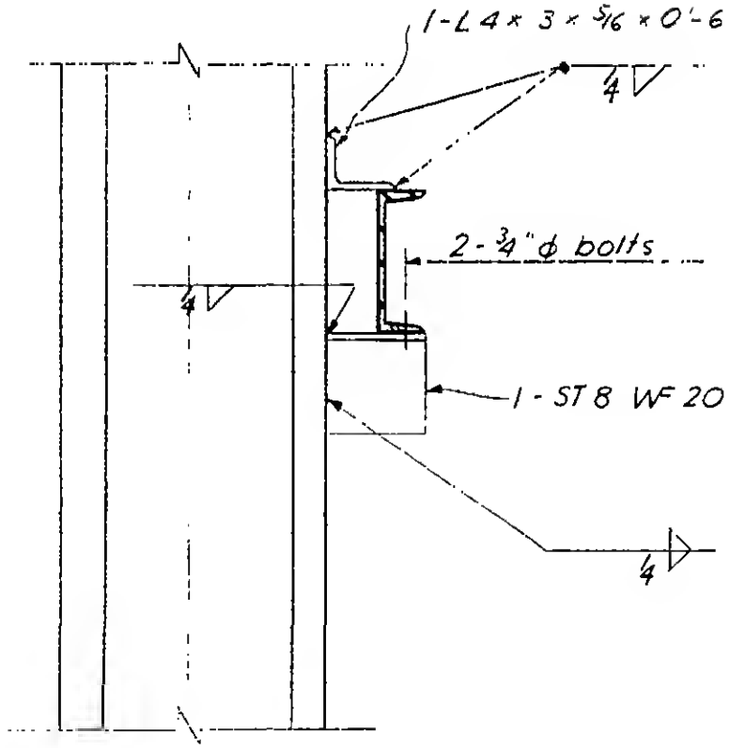

Section a-a

6-ABI-139