WORTHINGTON, SKILLING, HELLE & JACKSON — Civil & Structural Engineers

PROJECT: THE WORLD TRADE CENTER | TITLE: CONNECTION DETAIL 334 A, B, C & D | DATE: 6-5-67

REVISIONS
6-30-67
7-28-67
9-15-67
11-10-67
5-6-68

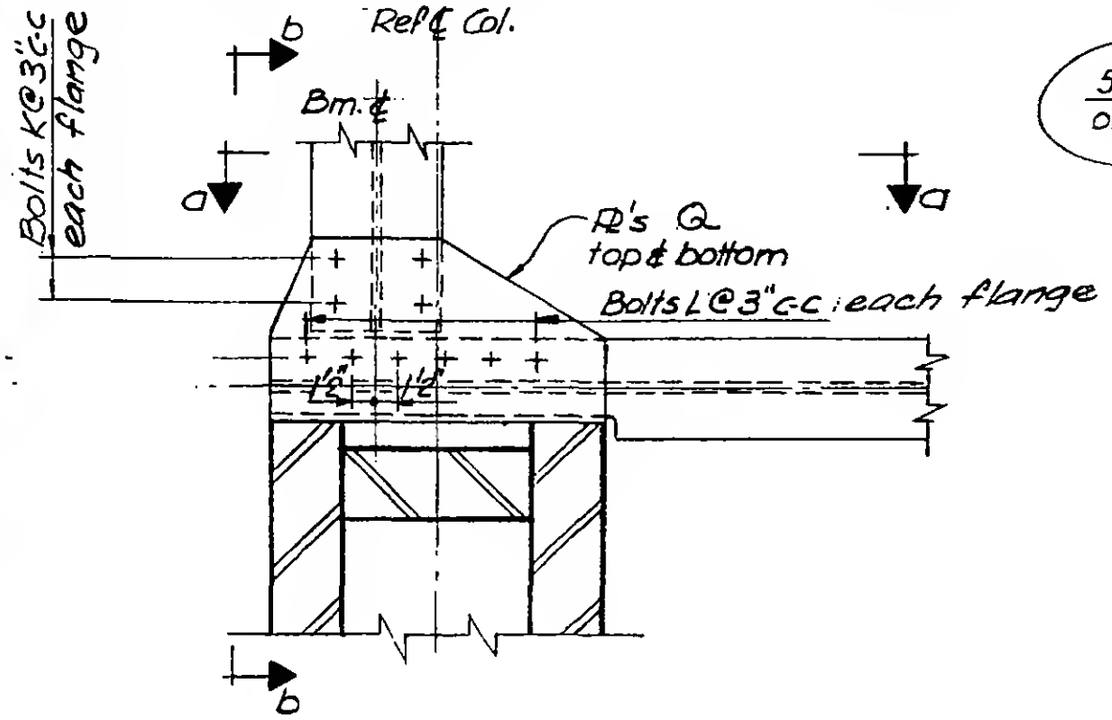

Plan

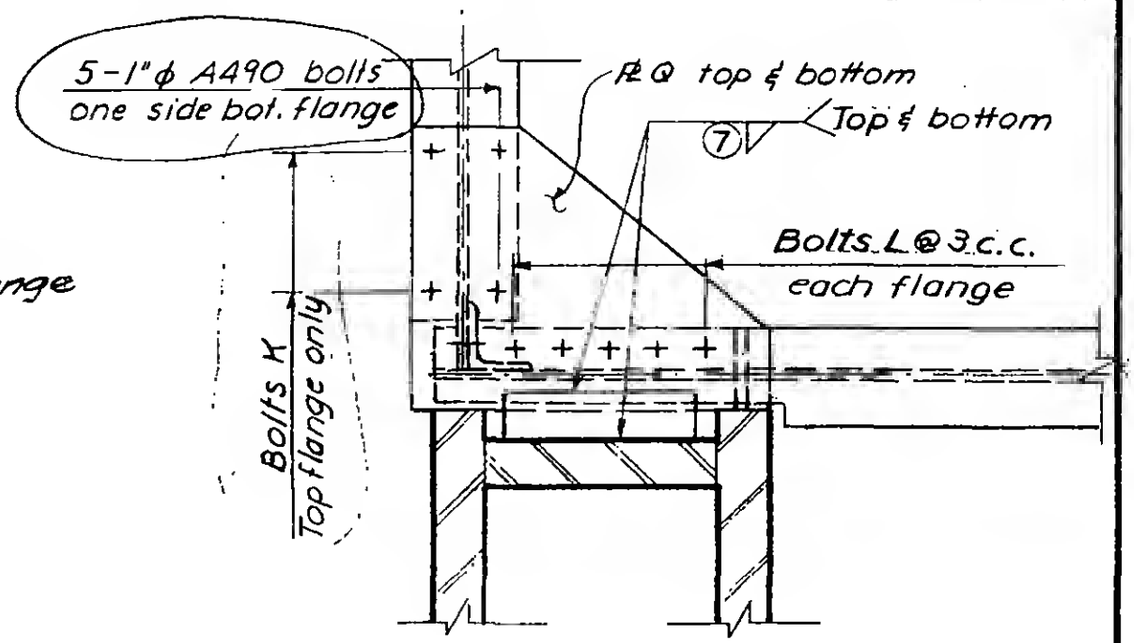

Plan
334 D only

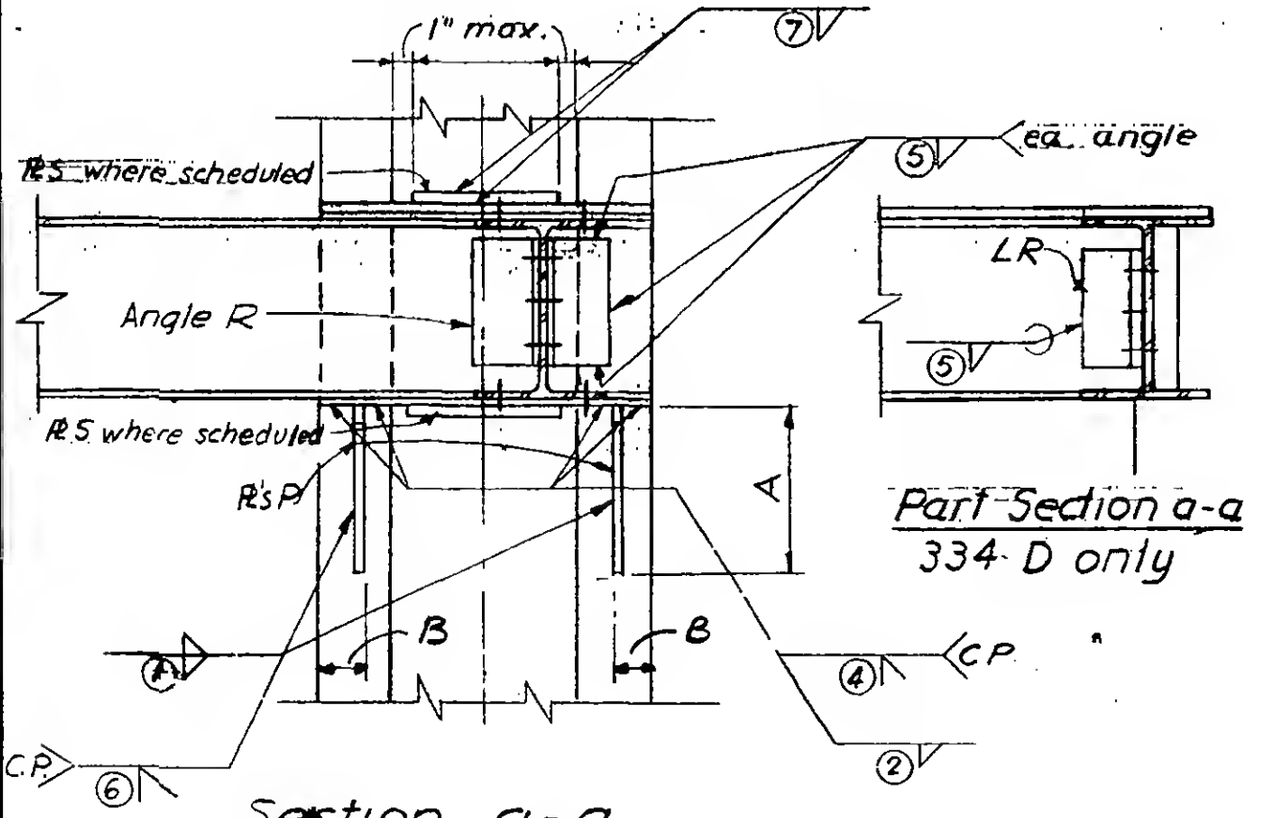

Part Section a-a
334 D only

Section a-a

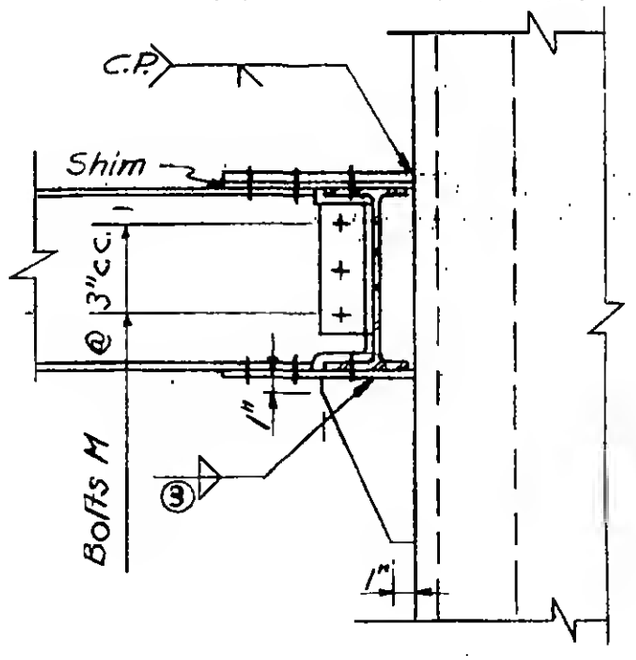

Section b-b

G-AB1-141

LICENSED PROFESSIONAL ENGINEER
LESLIE E. ROBERTSON
No. 34360
UNIVERSITY OF THE STATE OF NEW YORK