WORTHINGTON, SKILLING, HELLE & JACKSON — Civil & Structural Engineers

PROJECT THE WORLD TRADE CENTER | TITLE CONNECTION DETAIL 335 A, C, D, E, F, K | DATE 5-1-67

REVISIONS

7-28-67

10-2-67

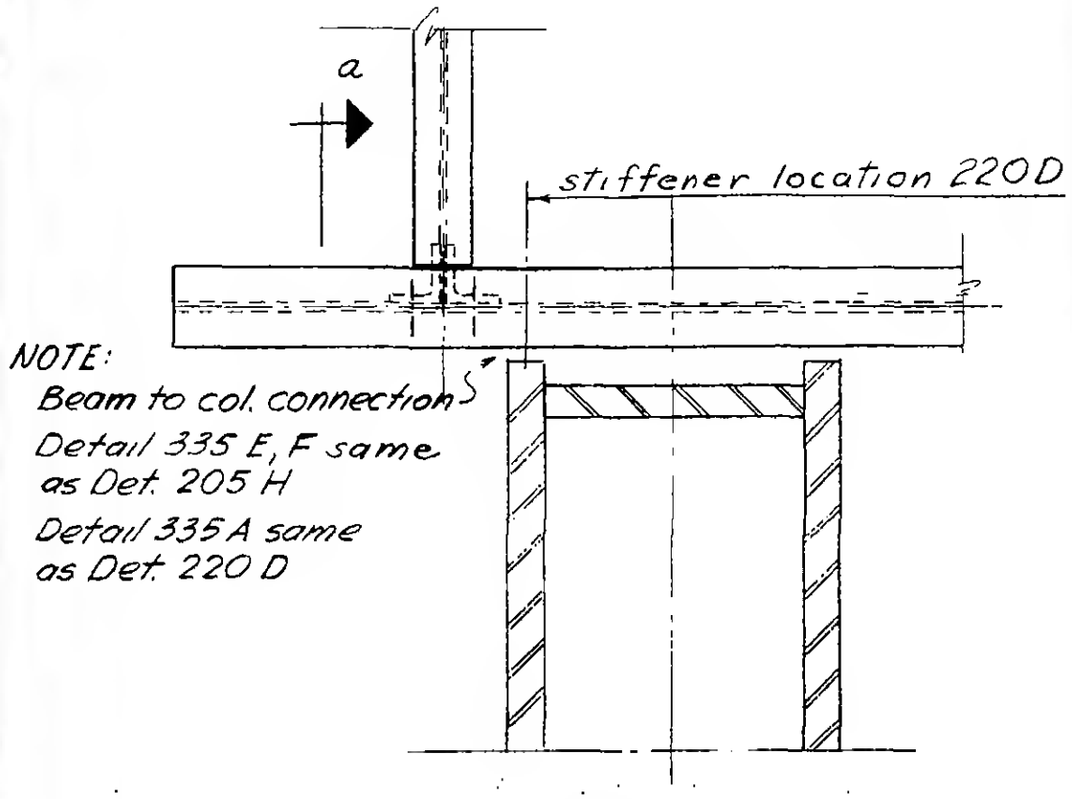

Plan of detail 335 A, E, F

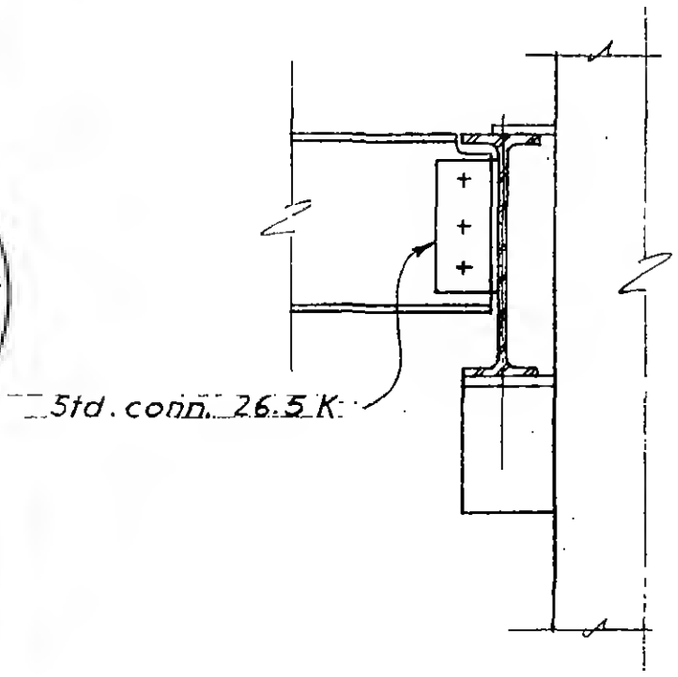

Section a-a

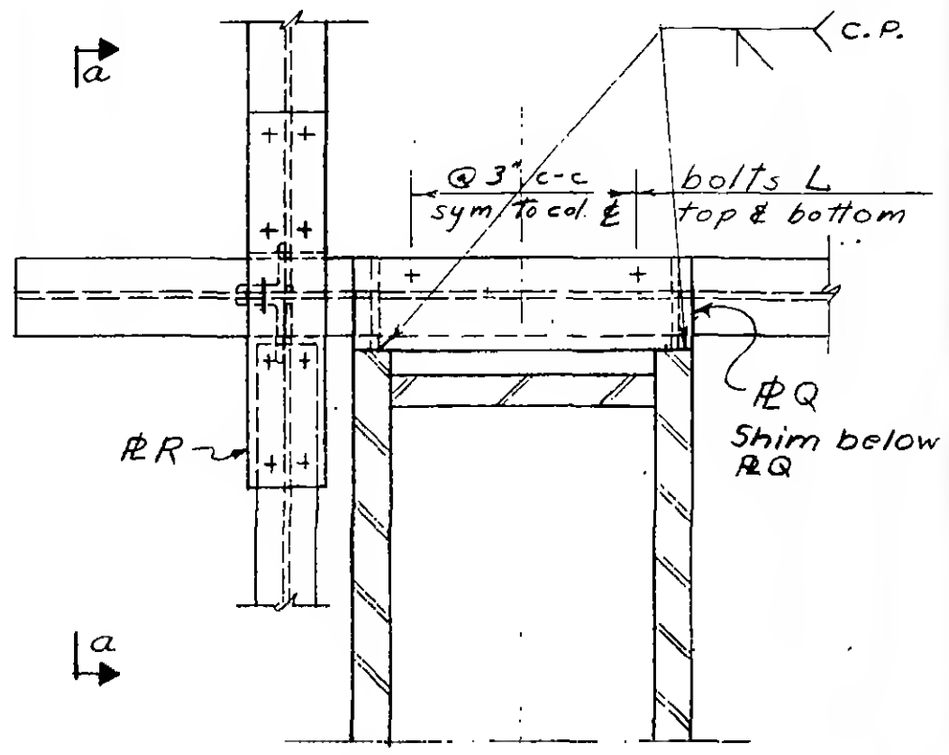

Plan of detail 335 C, D, K

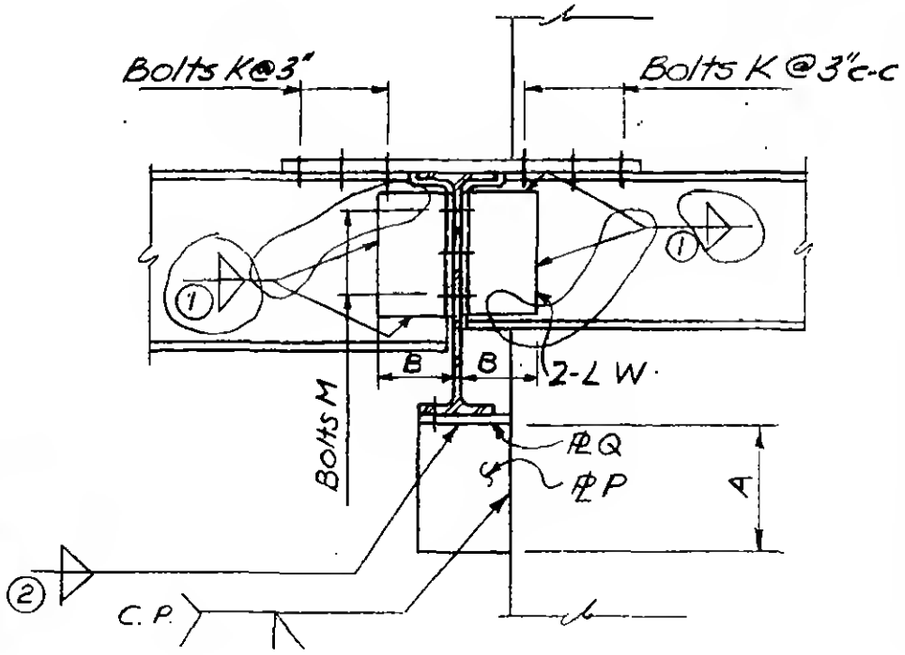

Section a-a

LESLIE E. ROBERTSON — LICENSED PROFESSIONAL ENGINEER — No. 34360 — UNIVERSITY OF THE STATE OF NEW YORK

6-AB1-142