SKILLING - HELLE - CHRISTIANSEN - ROBERTSON — Structural & Civil Engineers

PROJECT THE WORLD TRADE CENTER | TITLE CONNECTION DETAIL 335-B,P | DATE 7-28-67

REVISIONS

8-14-67

9-15-67

10-2-67

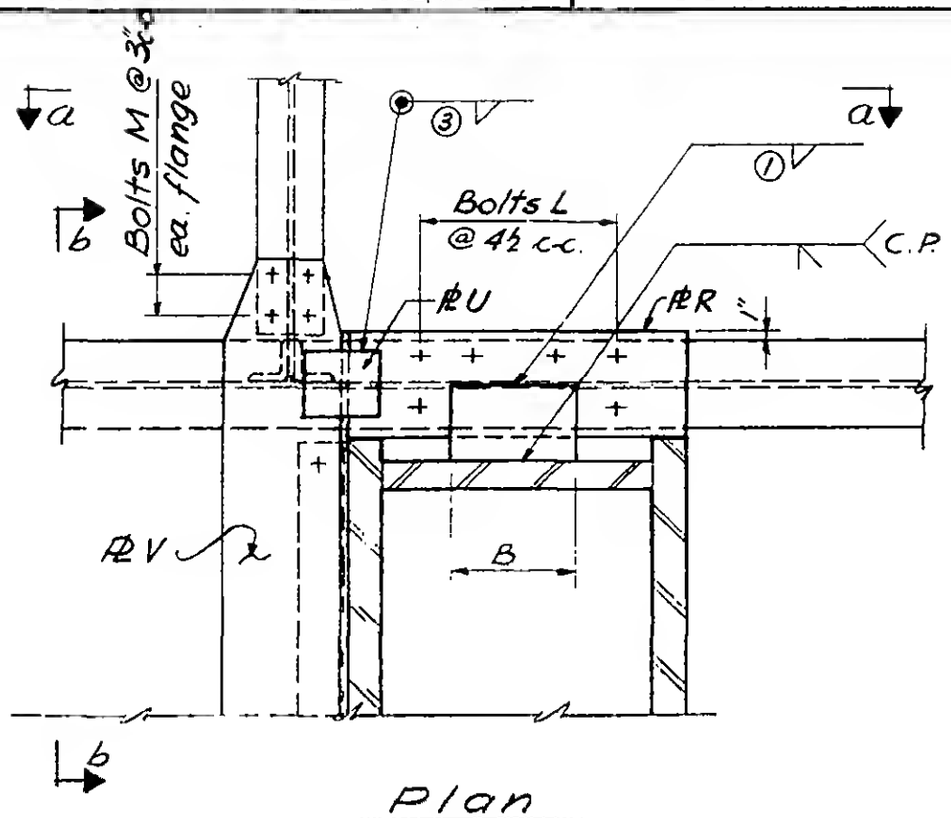

Plan

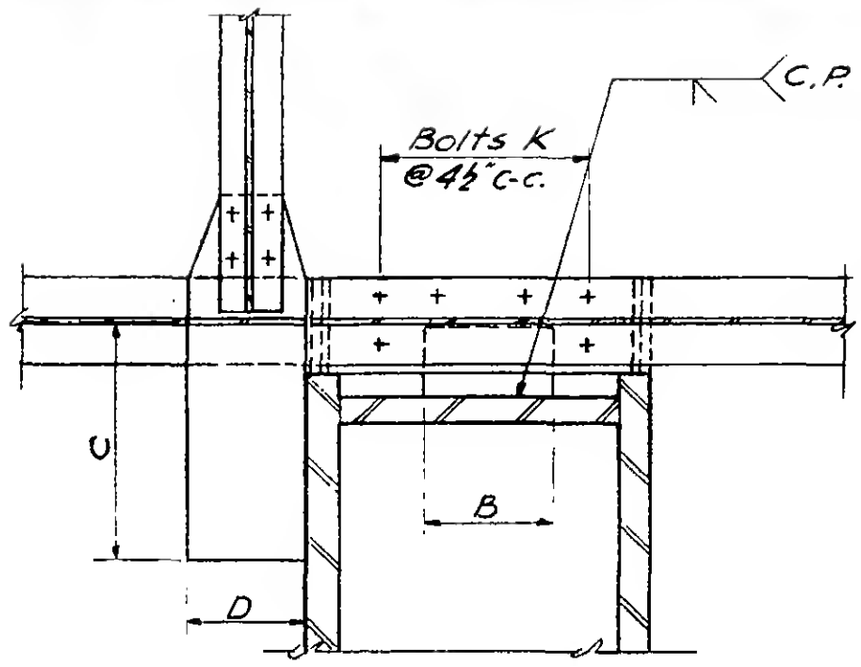

Plan Section c-c

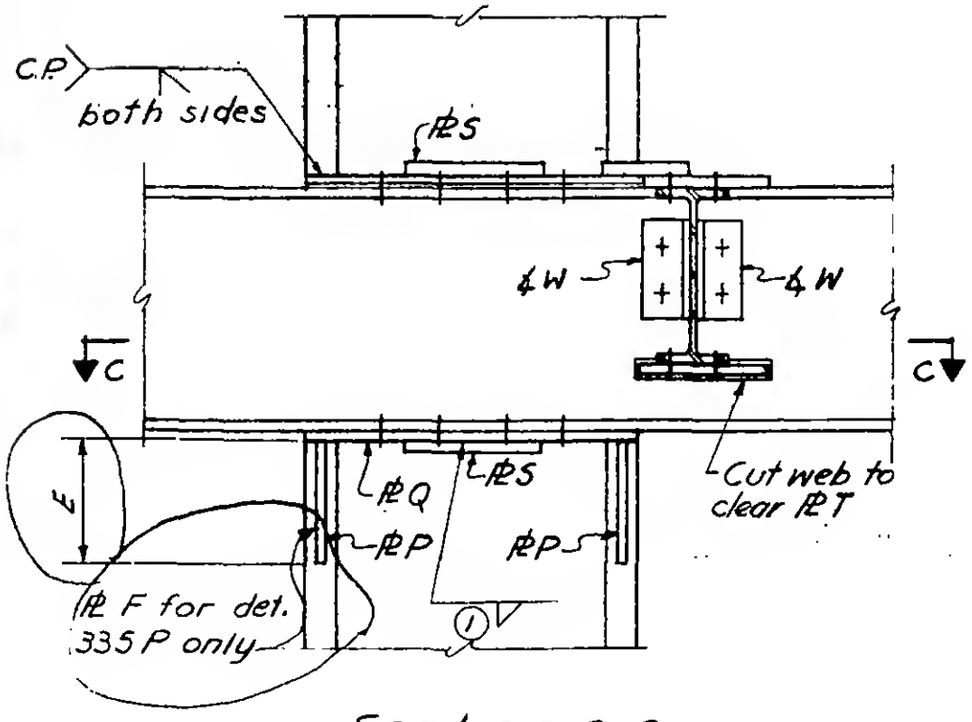

Section a-a

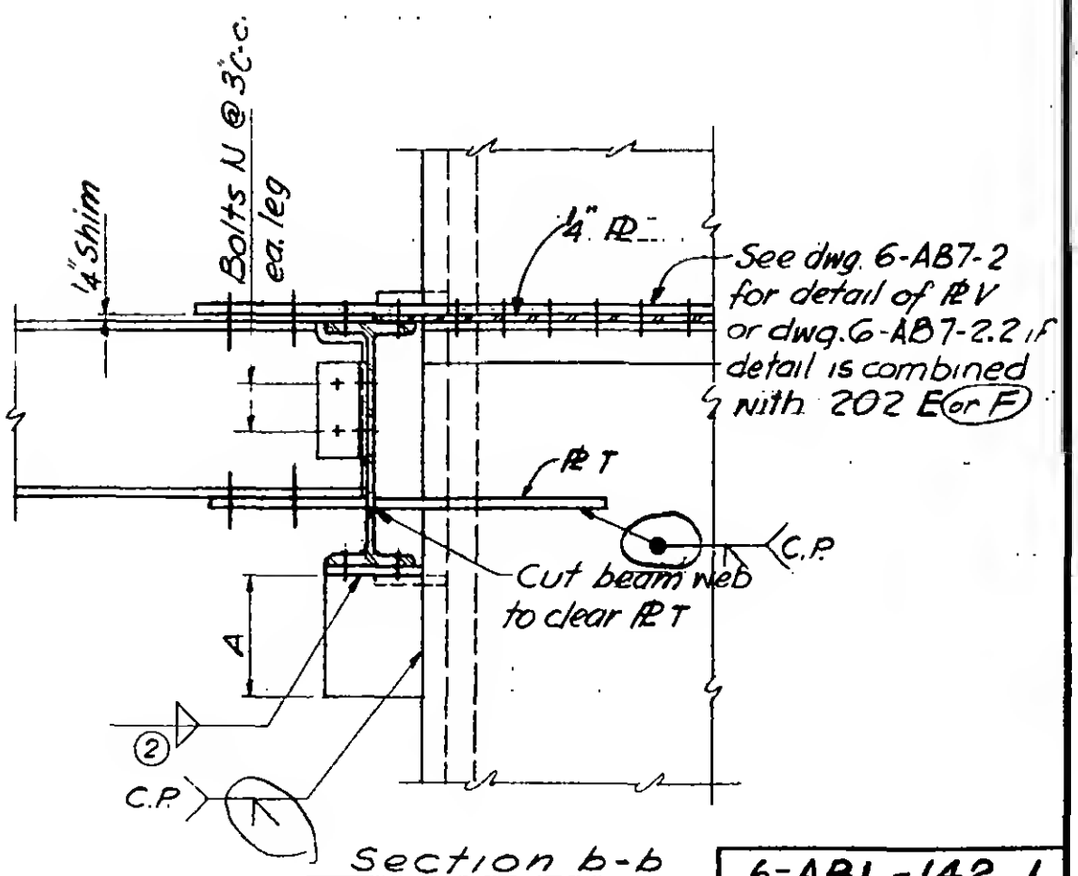

Section b-b

6-AB1-142.1

LICENSED PROFESSIONAL ENGINEER — LESLIE E. ROBERTSON — No. 34360 — UNIVERSITY OF THE STATE OF NEW YORK