SKILLING - HELLE - CHRISTIANSEN - ROBERTSON Structural & Civil Engineers

PROJECT THE WORLD TRADE CENTER | TITLE CONNECTION DETAIL 335 M | DATE 12-21-67

REVISIONS

7-17-68

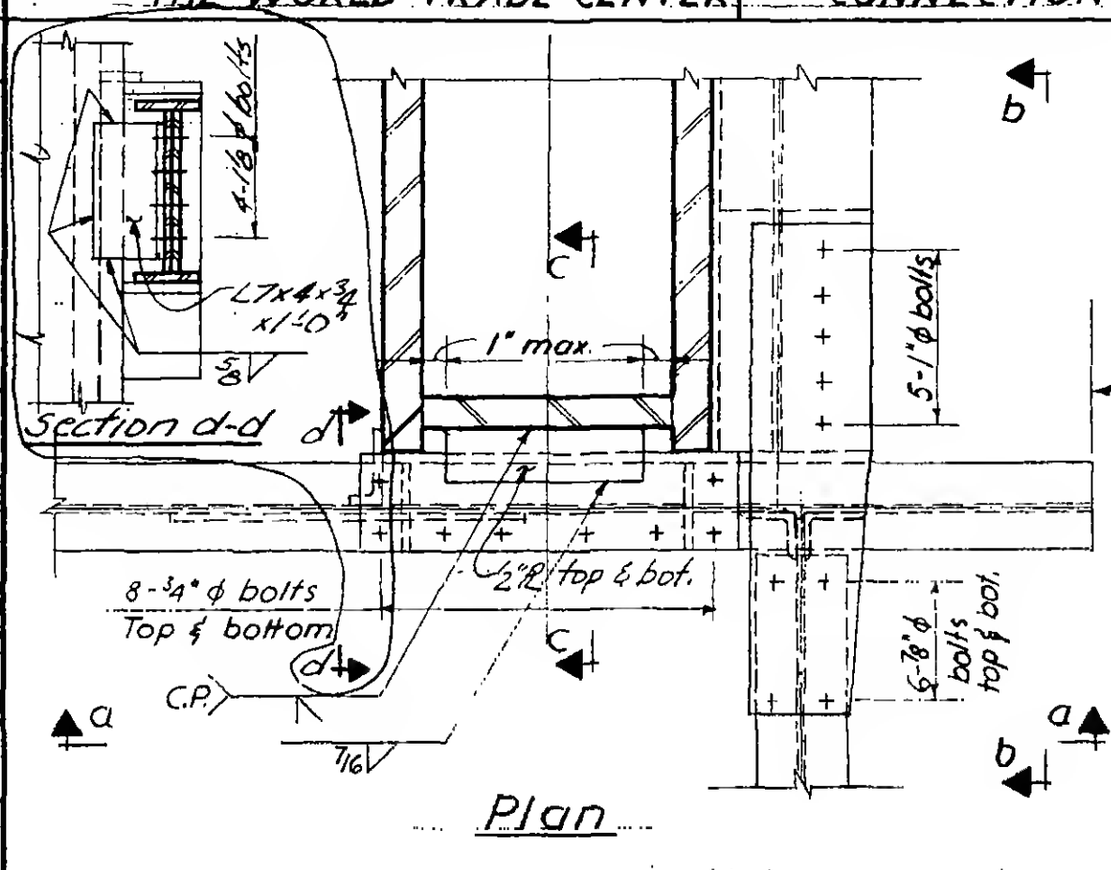

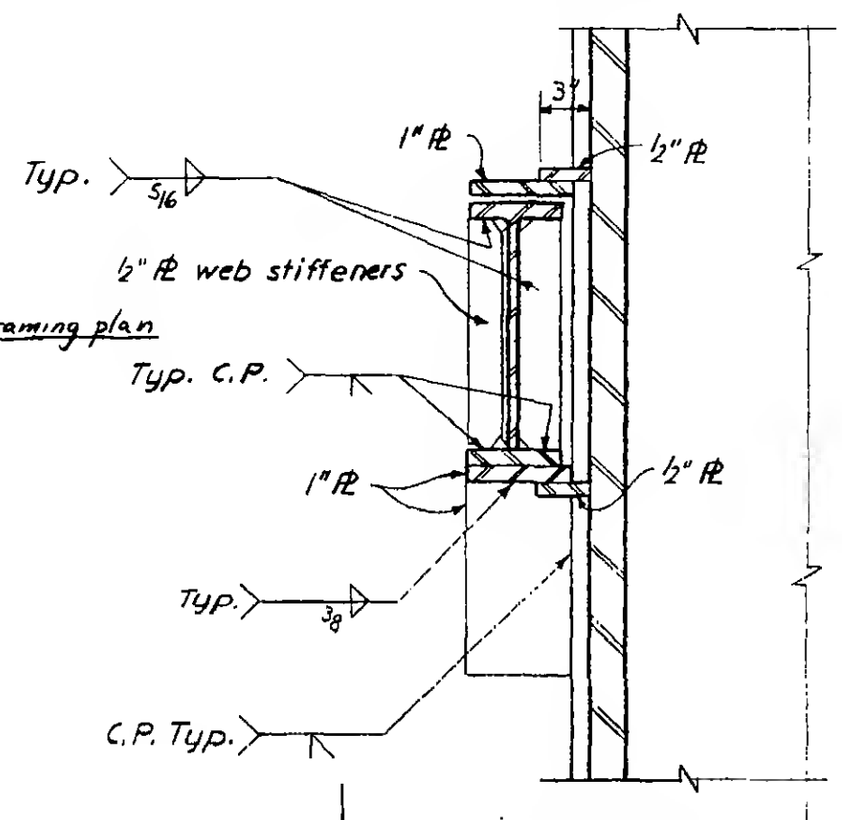

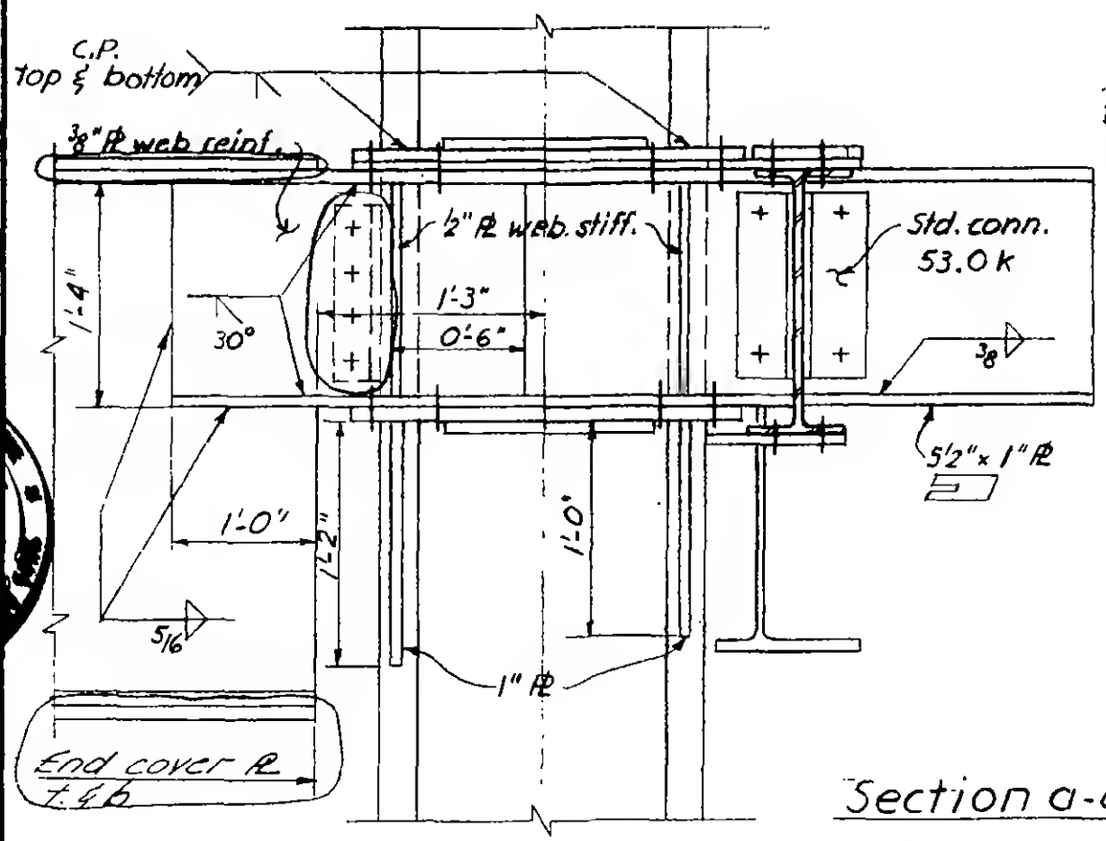

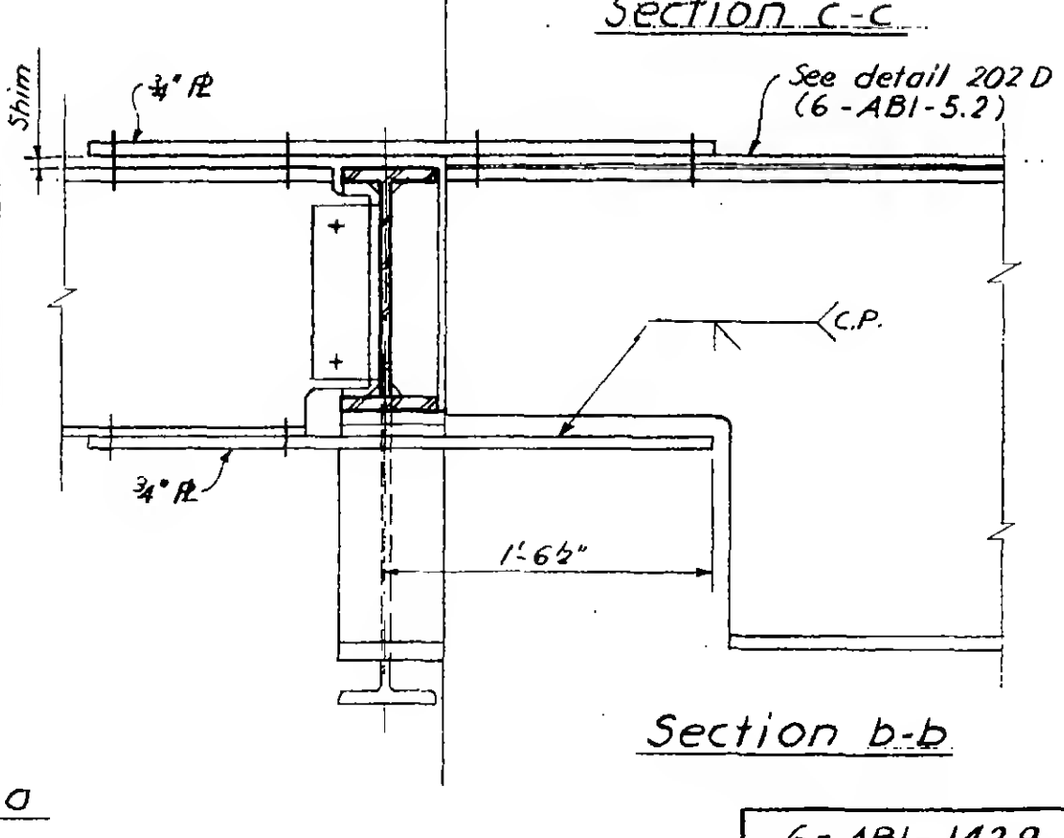

6-ABI-142.9