SKILLING - HELLE - CHRISTIANSEN - ROBERTSON Structural & Civil Engineers

PROJECT THE WORLD TRADE CENTER | TITLE CONNECTION DETAIL 335N | DATE 4-17-68

REVISIONS

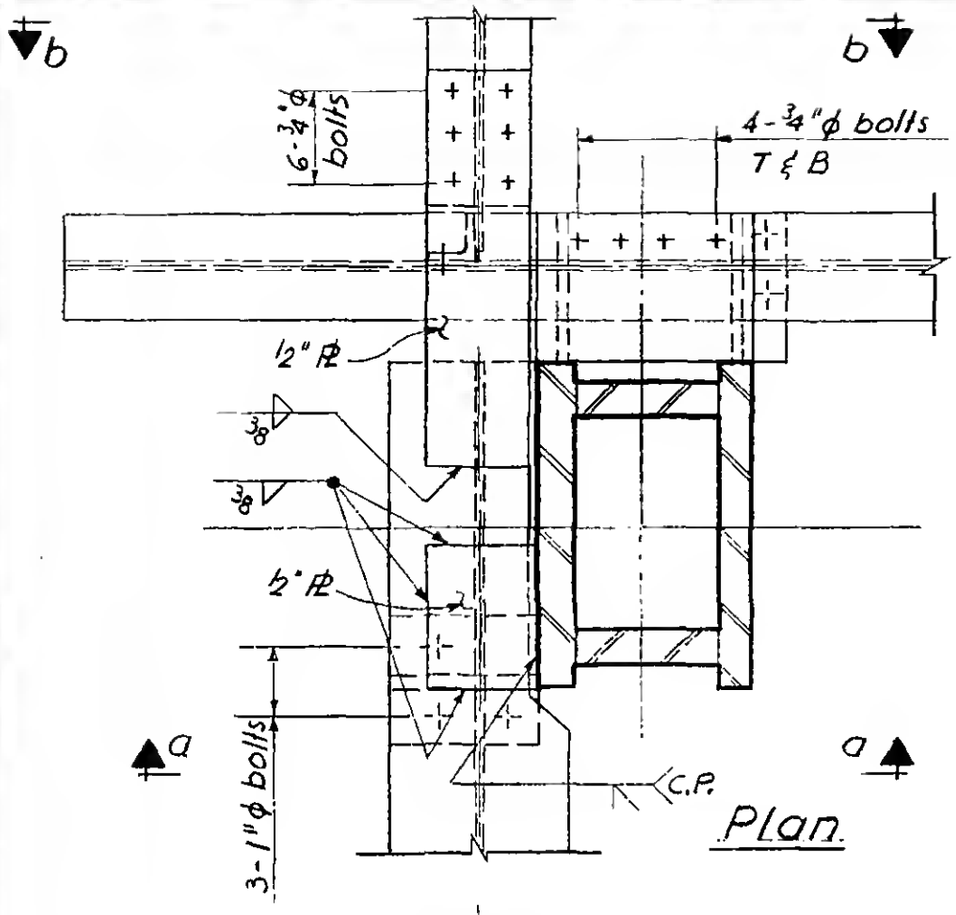

Plan

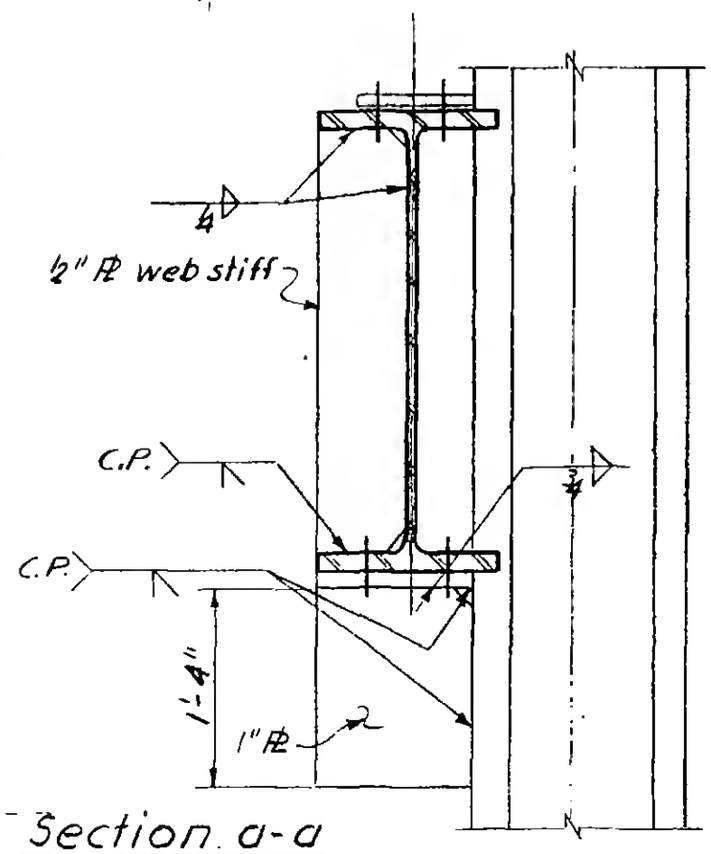

Section a-a

Wherever suitable reuse previously scheduled (Details 335K and 235D) plates and bolts.

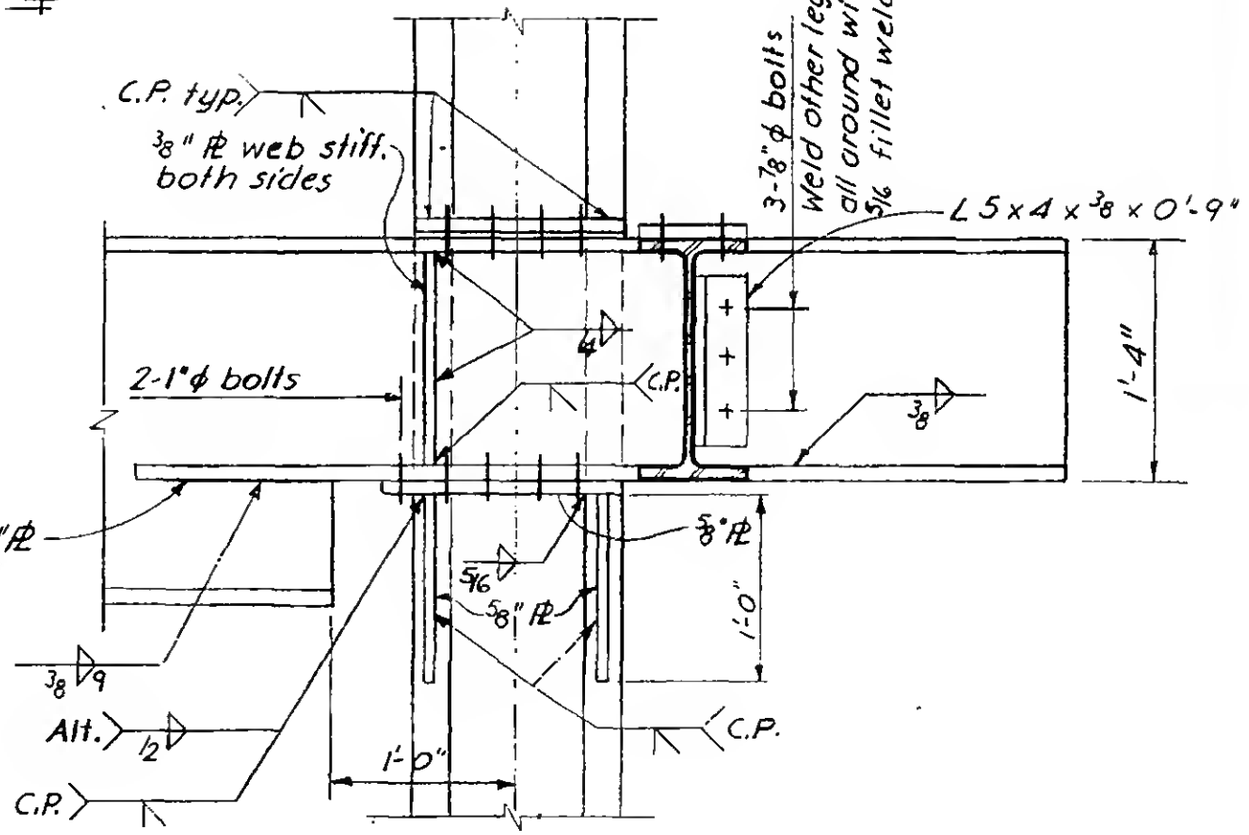

Section b-b

LICENSED PROFESSIONAL ENGINEER LESLIE E. ROBERTSON No. 34360 STATE OF NEW YORK

6-ABI-142.10