WORTHINGTON, SKILLING, HELLE & JACKSON — Civil & Structural Engineers

PROJECT: THE WORLD TRADE CENTER | TITLE: CONNECTION DETAIL 338 A,B,D,F,G,H | DATE: 5-1-67

REVISIONS
6-30-67
7-28-67
8-5-67
10-2-67
2-9-68

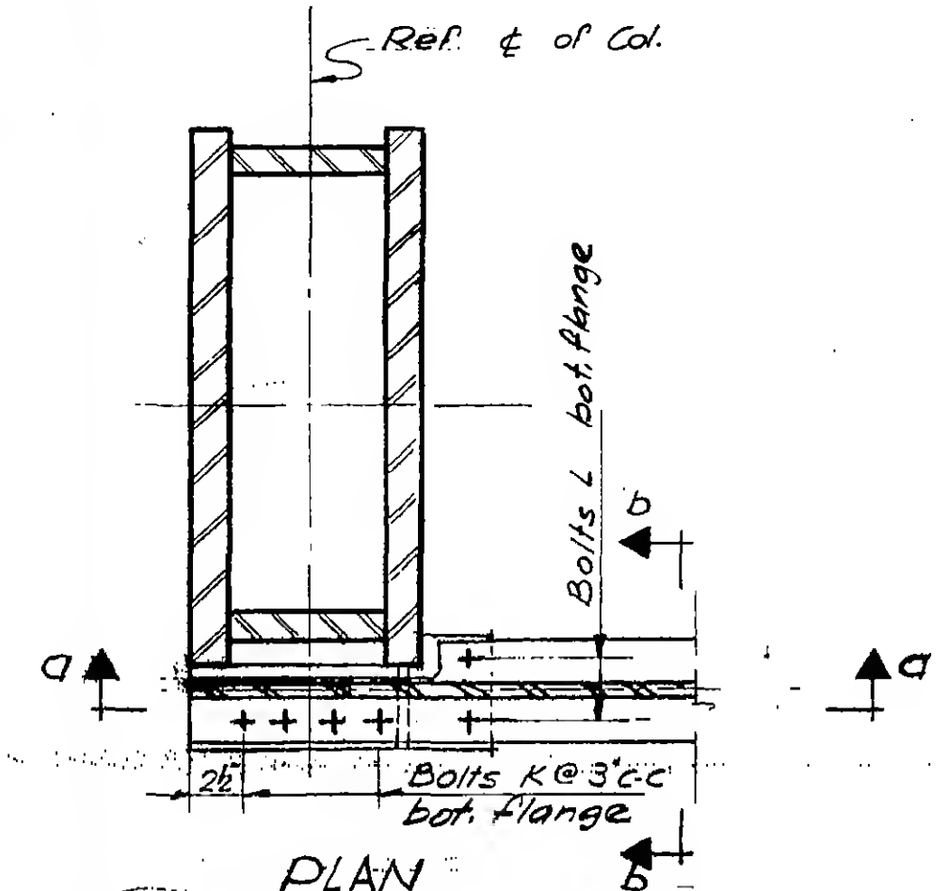

PLAN
Where bolts K & L are scheduled

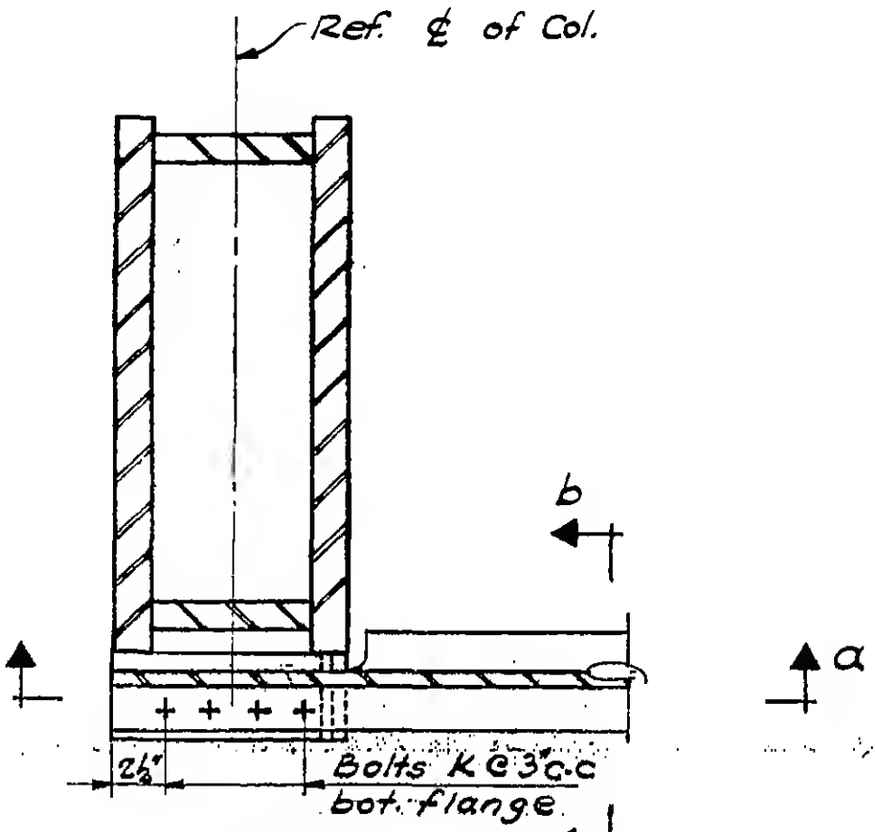

PLAN
Where bolts K only are scheduled

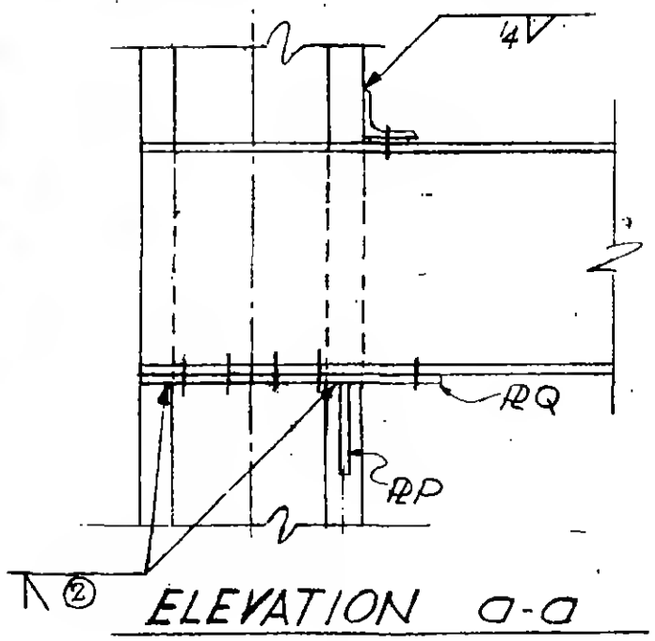

ELEVATION a-a

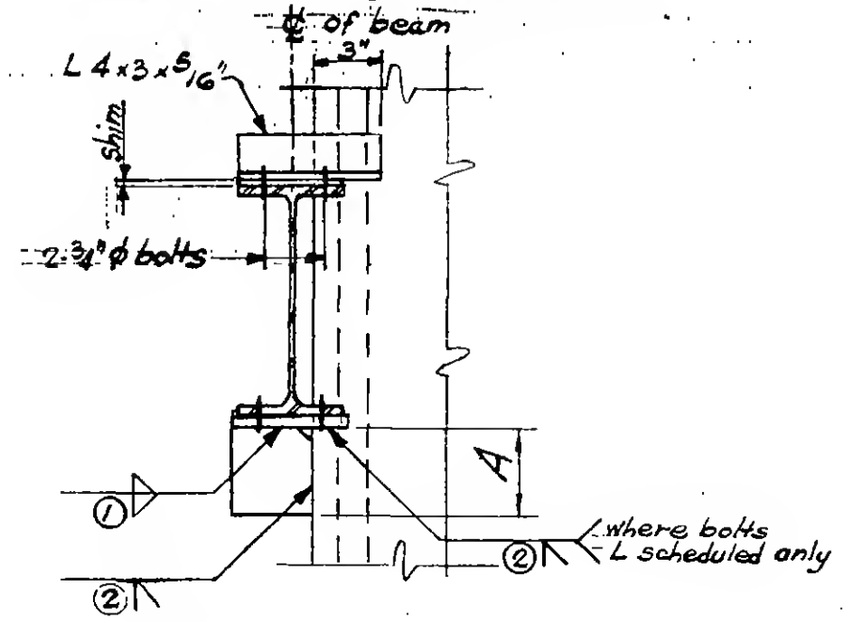

Section b-b

G-AB1-145