WORTHINGTON, SKILLING, HELLE & JACKSON — Civil & Structural Engineers

PROJECT THE WORLD TRADE CENTER | TITLE CONNECTION DETAIL 341 | DATE 7/20/67

REVISIONS

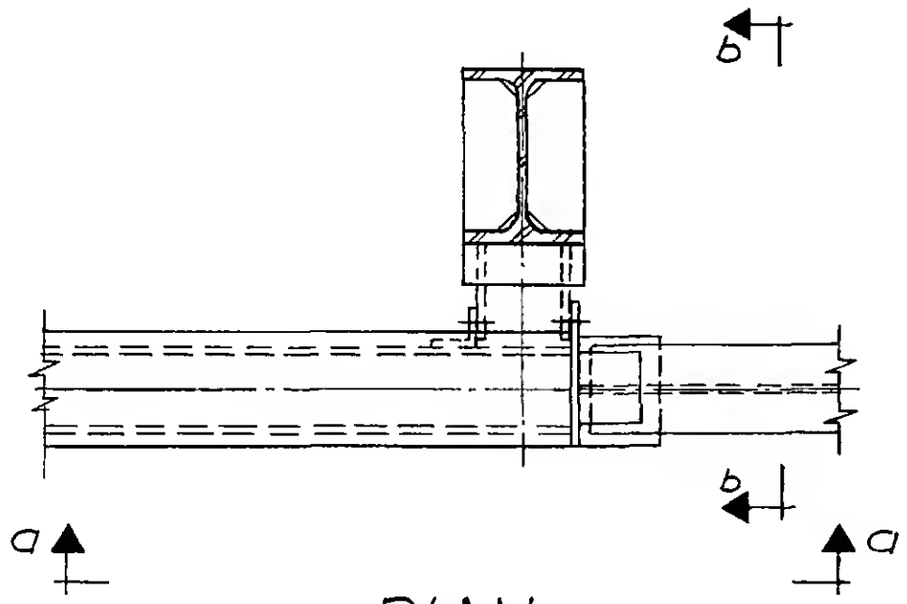

PLAN

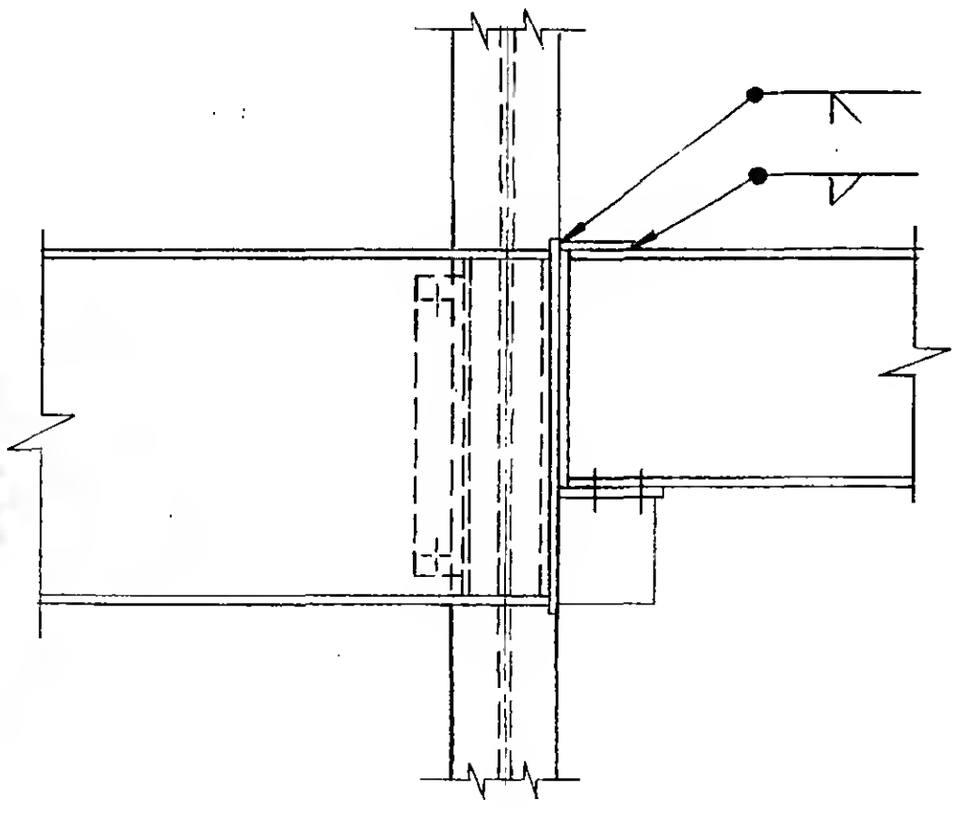

Section a - a

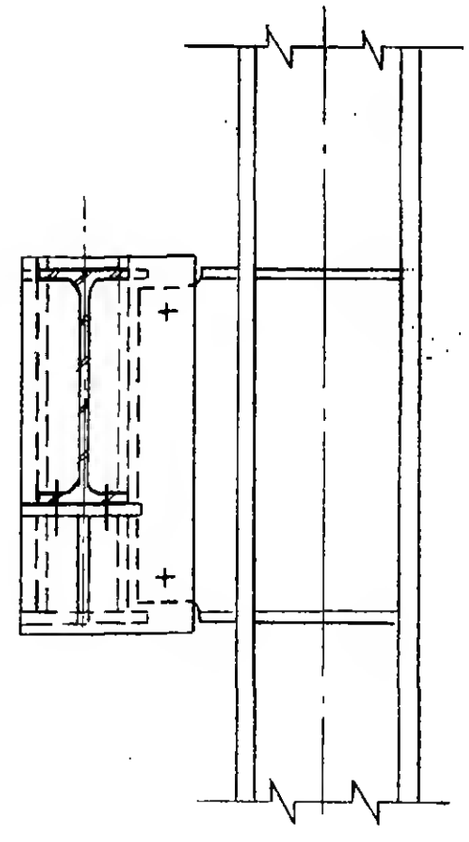

Section b - b

LICENSED PROFESSIONAL ENGINEER
LESLIE E. ROBERTSON
No. 34388
UNIVERSITY OF THE STATE OF NEW YORK

G-AB1-148