WORTHINGTON, SKILLING, HELLE & JACKSON — Civil & Structural Engineers

PROJECT: THE WORLD TRADE CENTER | TITLE: CONNECTION DETAIL 351 A, B & C | DATE: 5-1-67

REVISIONS

7-28-67
8-9-67
9-15-67
10-3-67
11-10-67

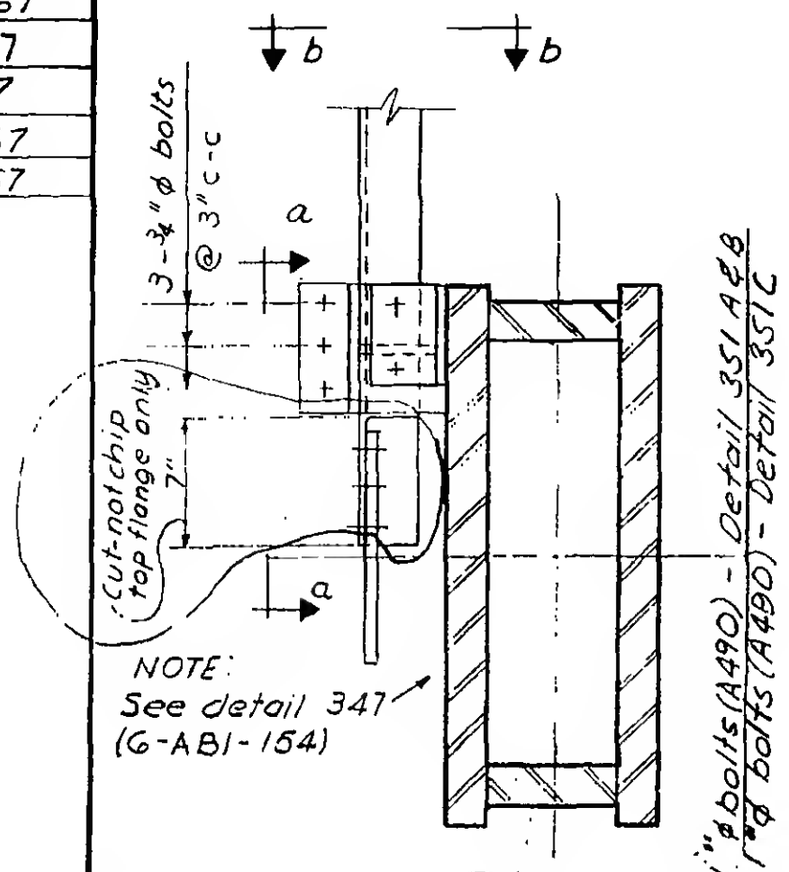

Plan

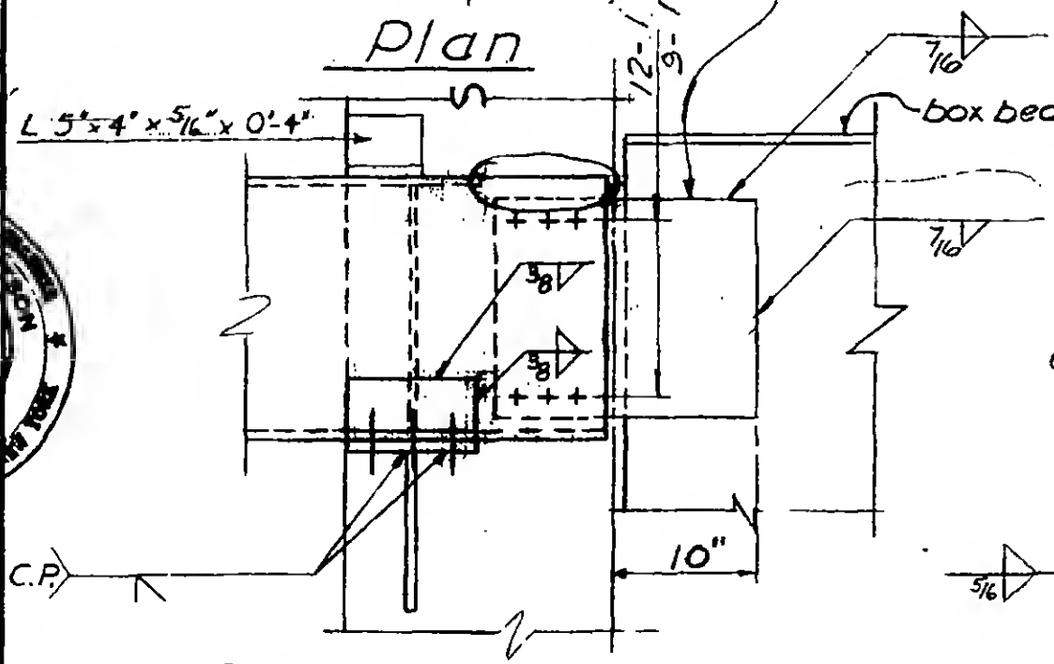

Section a-a

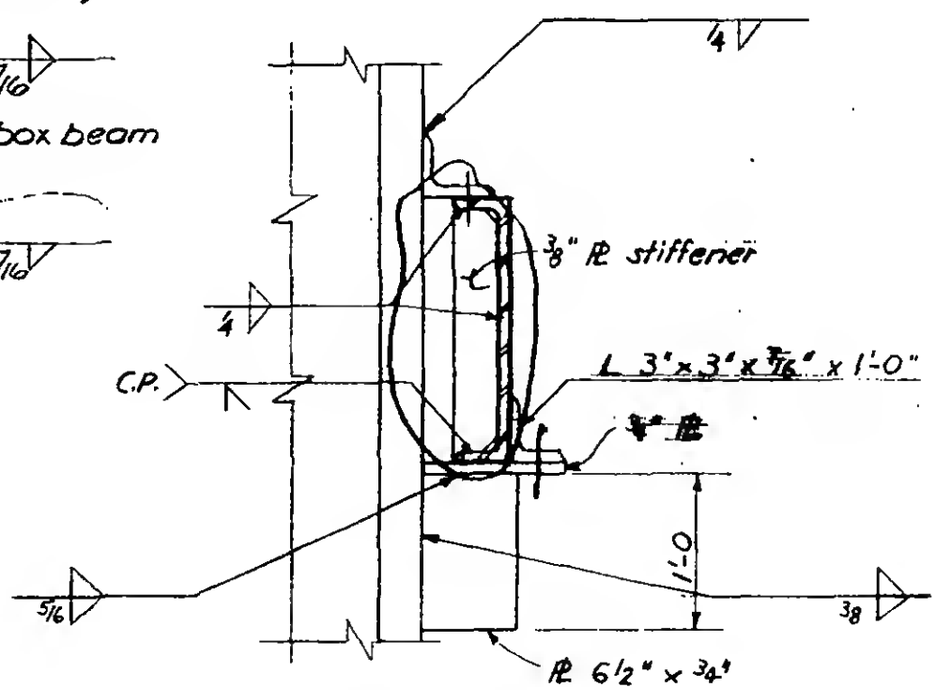

Section b-b

LESLIE E. ROBERTSON — No. 34960 — REGISTERED PROFESSIONAL ENGINEER — UNIVERSITY OF THE STATE OF NEW YORK

G-ABI-100