WORTHINGTON, SKILLING, HELLE & JACKSON — Civil & Structural Engineers

PROJECT: THE WORLD TRADE CENTER | TITLE: CONNECTION DETAIL 352 A & B | DATE: 5-9-67

REVISIONS

7-28-67

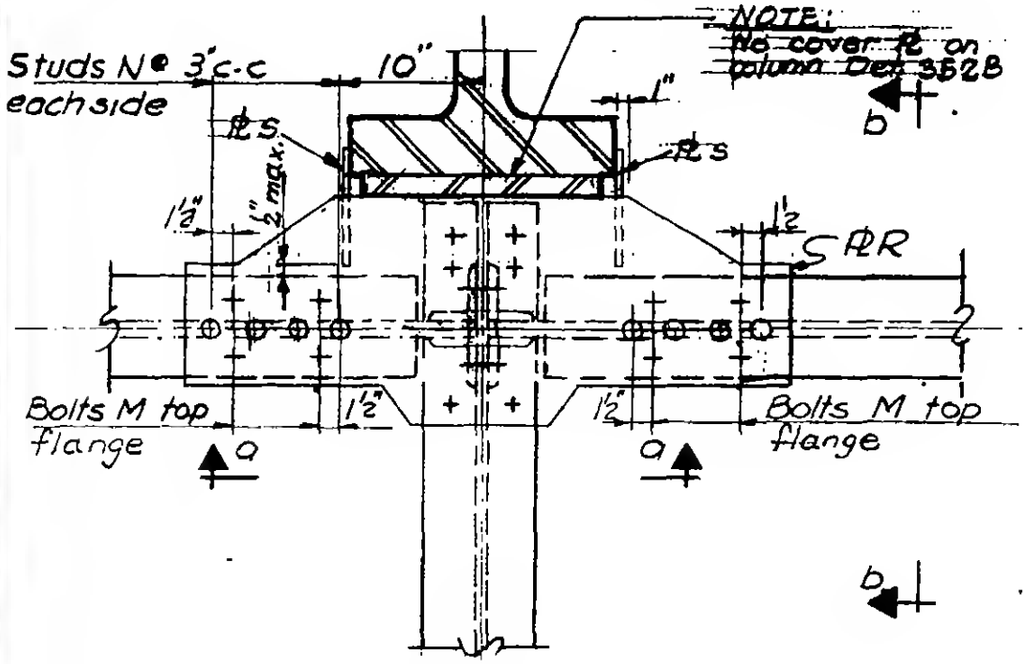

PLAN

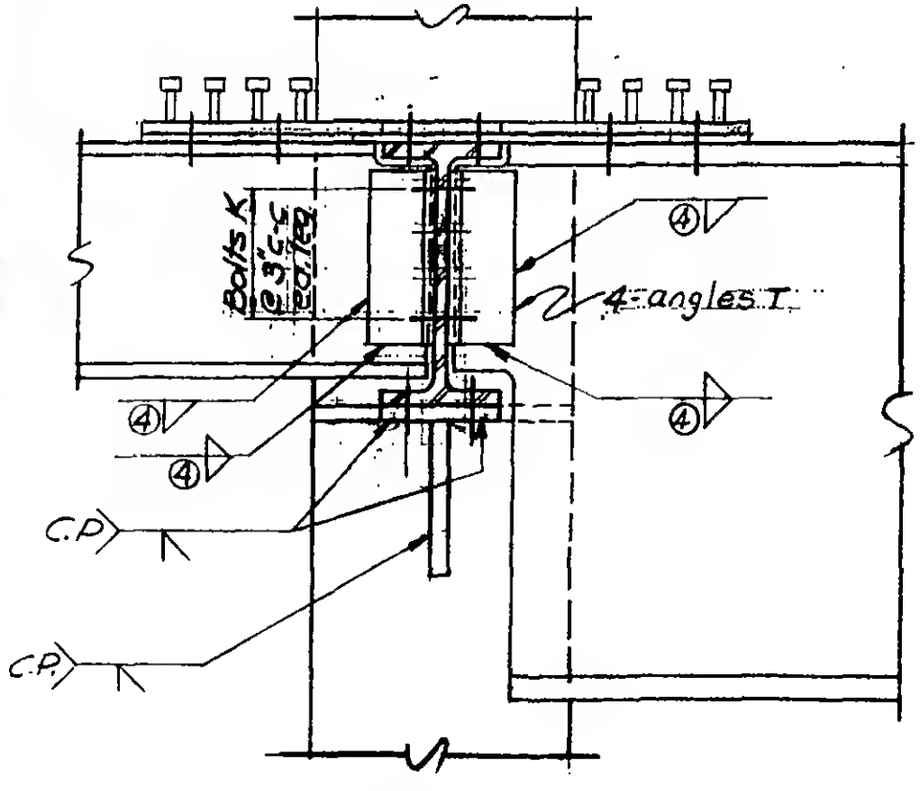

Section a-a

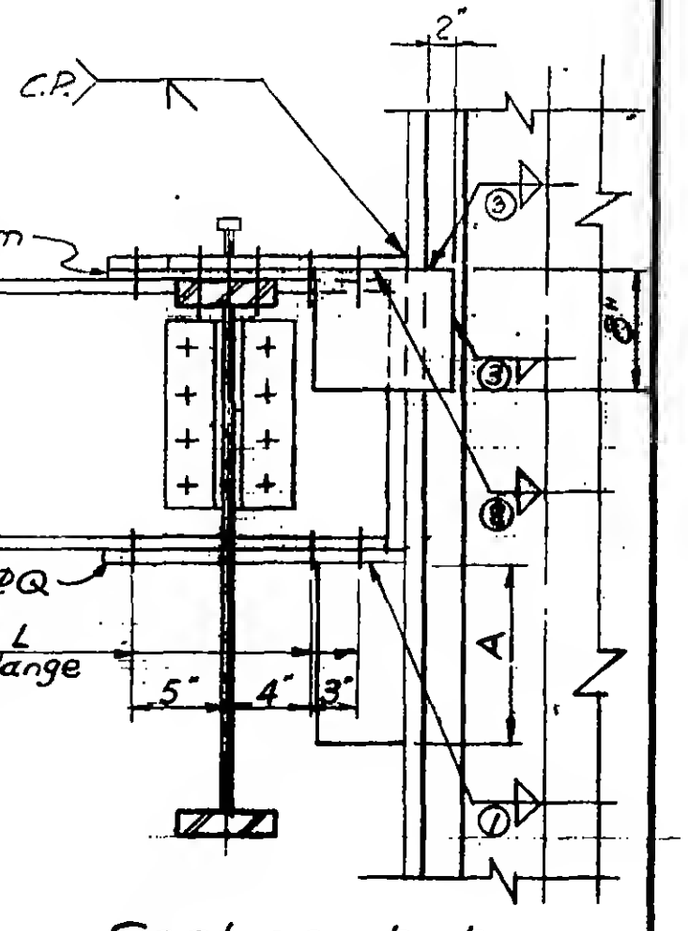

Section b-b

6-ABI-159