SKILLING - HELLE - CHRISTIANSEN - ROBERTSON Structural & Civil Engineers

PROJECT THE WORLD TRADE CENTER | TITLE CONNECTION DETAIL 354 C | DATE 10-2-67

REVISIONS

10-31-67

Detail 354 C : See G-AB5-101 for bracing elevation

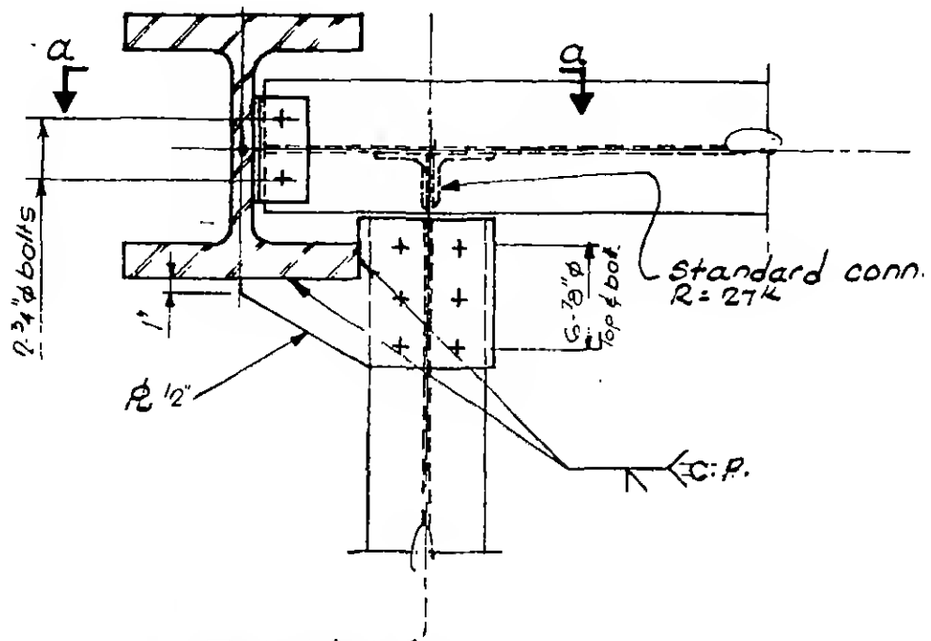

PLAN

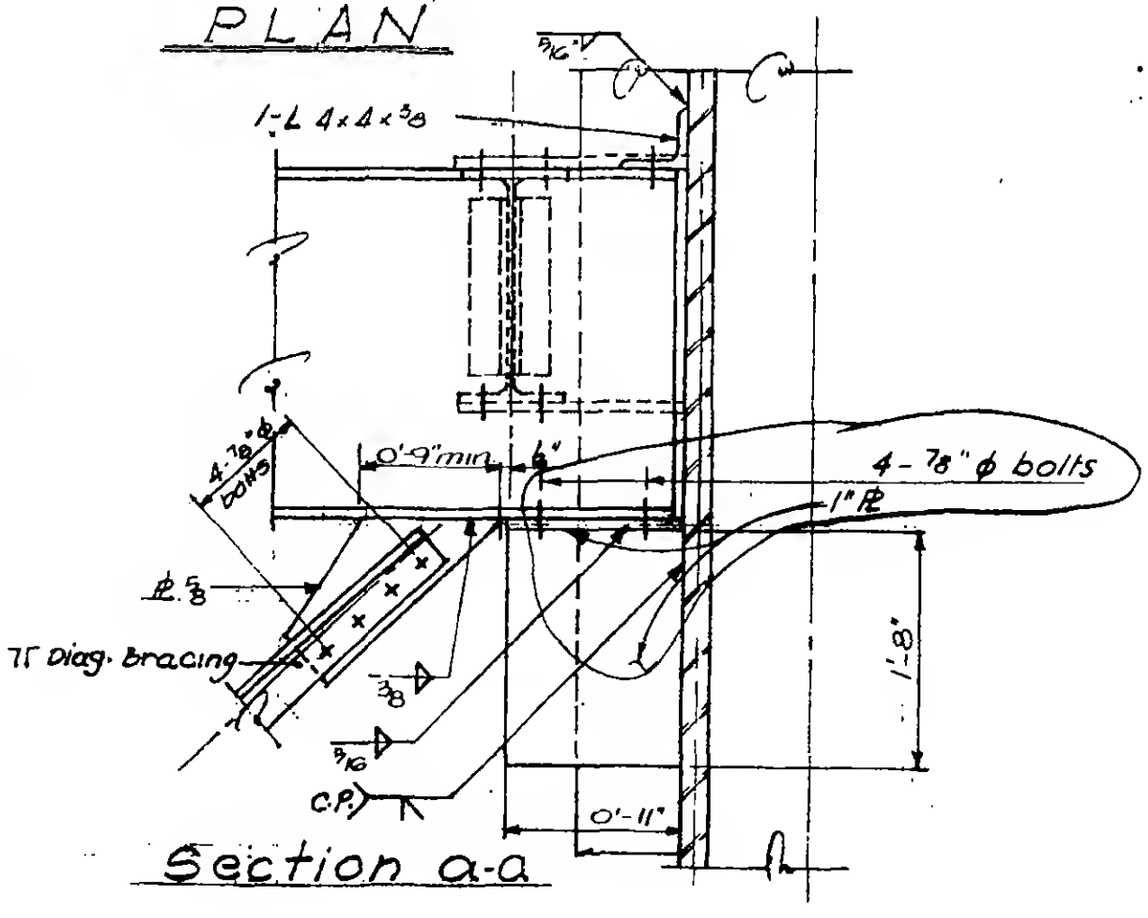

Section a-a

G-AB1-161.2