SKILLING - HELLE - CHRISTIANSEN - ROBERTSON Structural & Civil Engineers

PROJECT THE WORLD TRADE CENTER | TITLE CONNECTION DETAILS 357 G, K | DATE 10-5-67

REVISIONS

11-23-67

357G

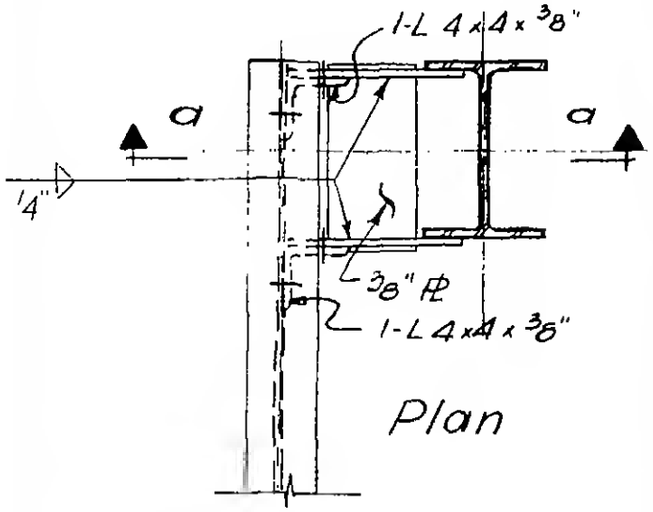

Plan

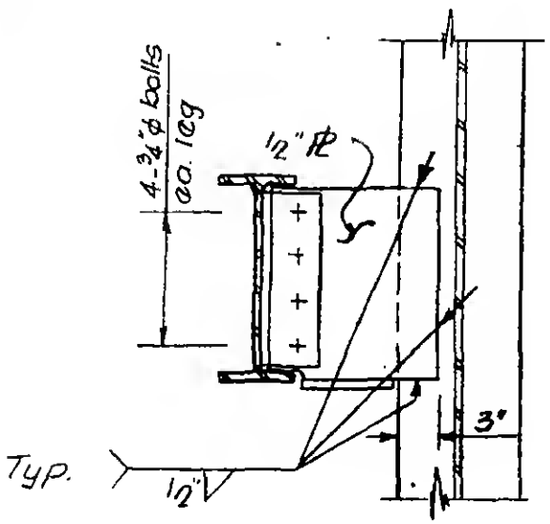

Section a-a

357K

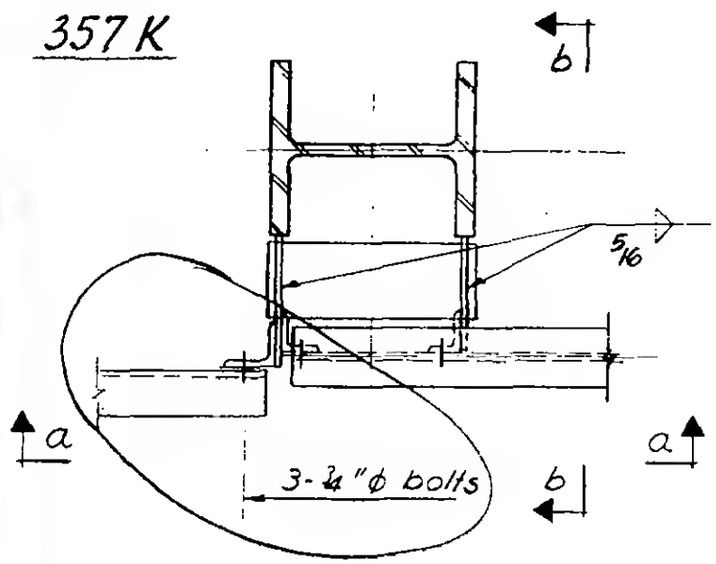

Plan

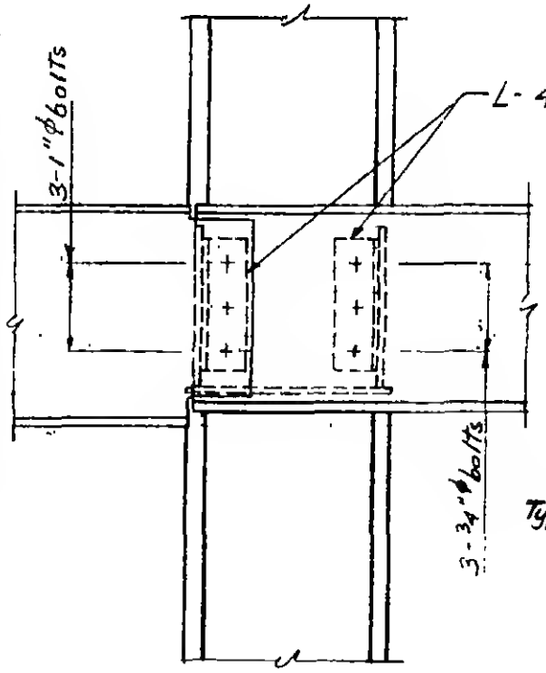

Section a-a

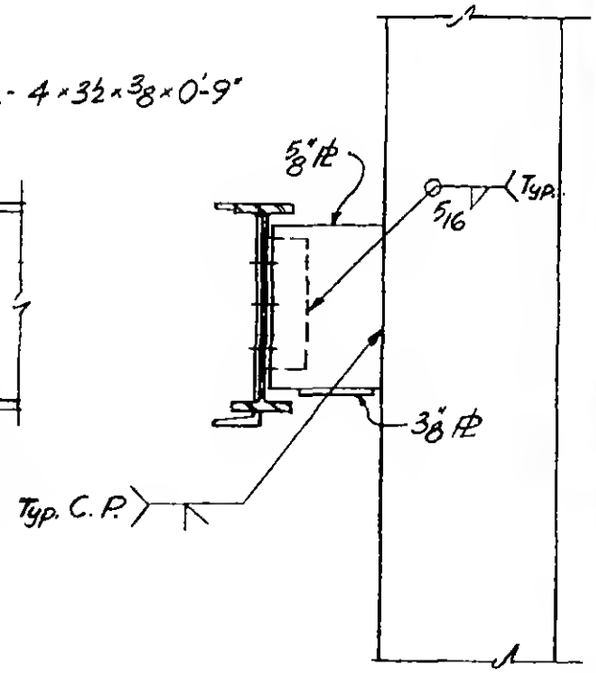

Section b-b

LESLIE E. ROBERTSON
No. 34360
STATE OF NEW YORK

G-ABI-164.2