WORTHINGTON, SKILLING, HELLE & JACKSON — Civil & Structural Engineers

PROJECT: THE WORLD TRADE CENTER | TITLE: CONNECTION DETAIL 363A, B | DATE: 5-22-67

REVISIONS
7-28-67
8-5-67
3-11-68

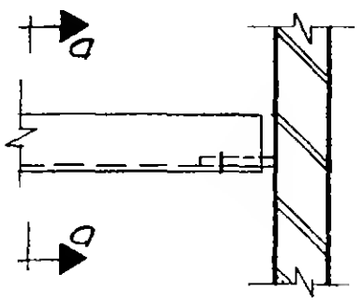

Plan - detail 363A
9" Channel Support

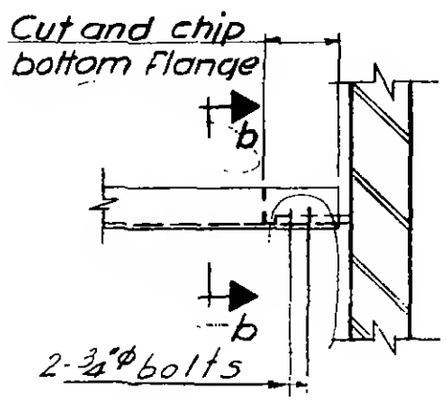

Plan - detail 363B
(5" or 6") Channel Support

SCHEDULE		
	363A	363B
PLATE		
P	1/2"	6 x 3/8" x 0'-6"
DIMENSION		
A	—	3/4"
BOLTS		
K	2-7/8"ϕ	—
WELD		
①	—	5/16

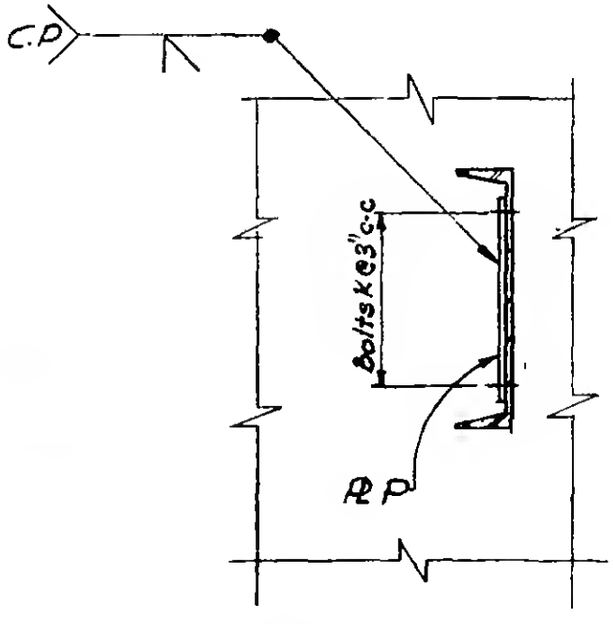

Section a-a

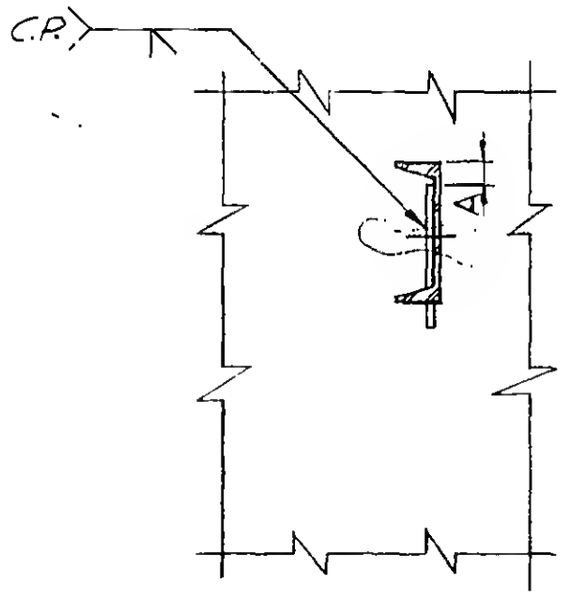

Section b-b

LICENSED PROFESSIONAL ENGINEER
LESLIE E. ROBERTSON
No. 34960
UNIVERSITY OF THE STATE OF NEW YORK

6-ABI-170