SKILLING - HELLE - CHRISTIANSEN - ROBERTSON Structural & Civil Engineers

PROJECT THE WORLD TRADE CENTER | TITLE CONNECTION DETAIL 364 G & H | DATE 2-9-68

REVISIONS

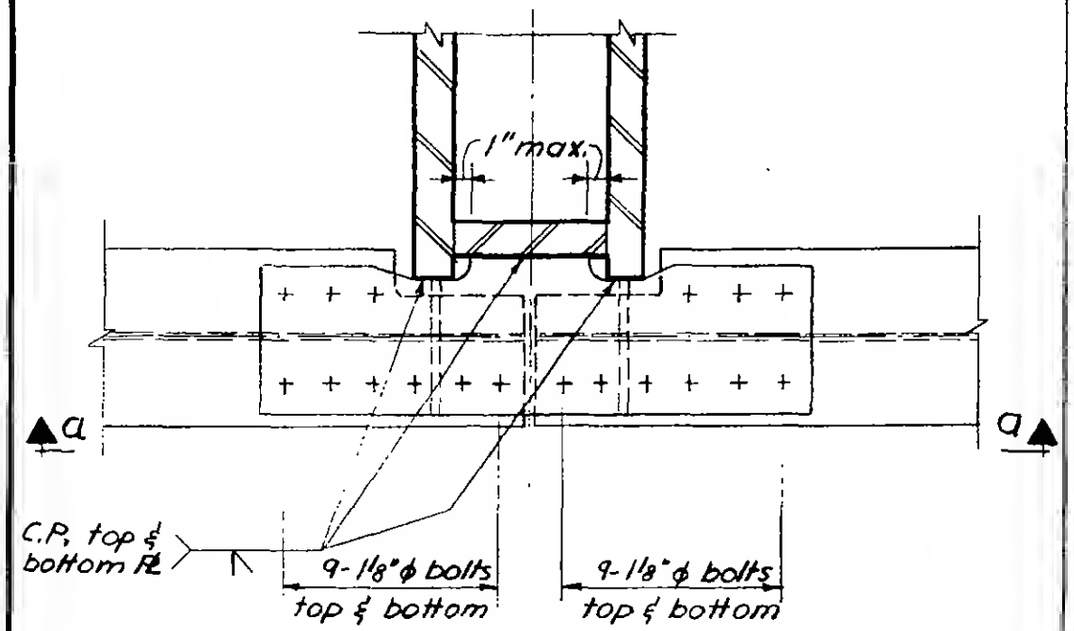

Plan

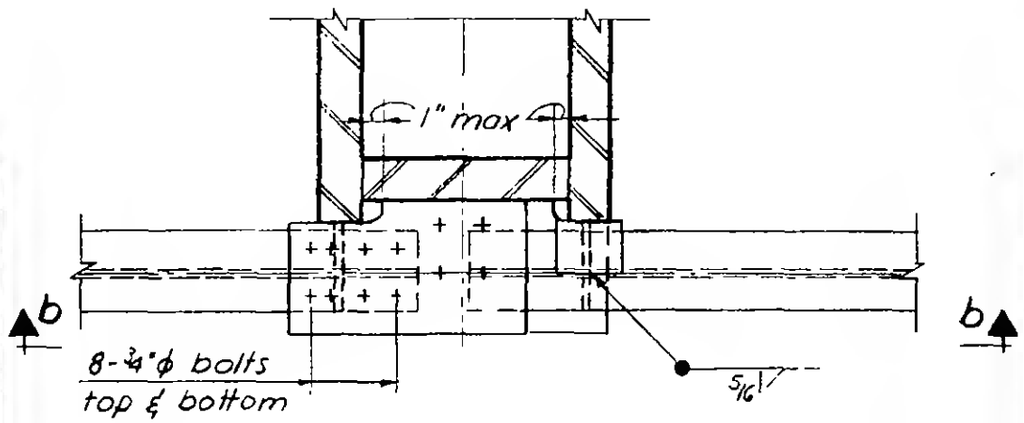

Plan

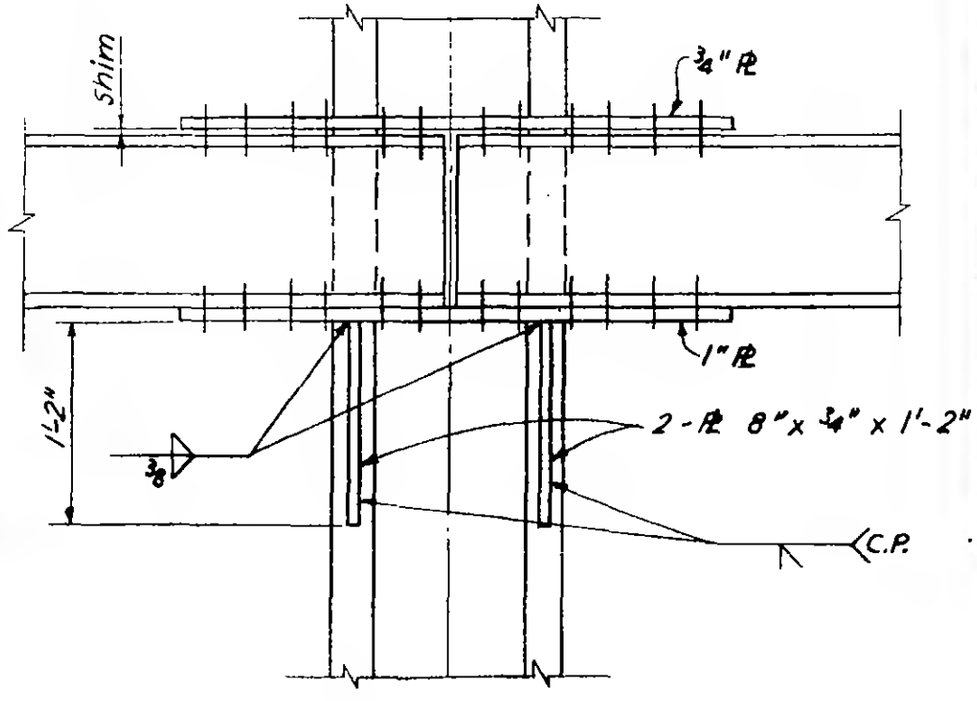

Section a-a

Detail 364G

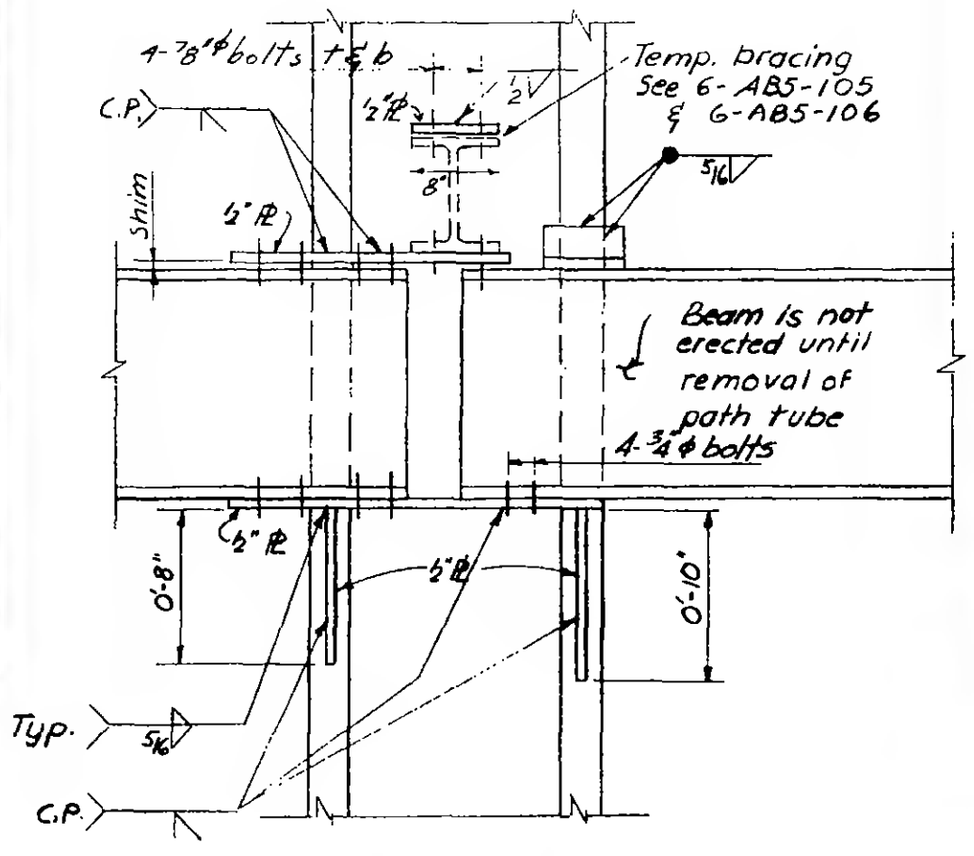

Section b-b

Detail 364 H

6-AB1-171.4

LICENSED PROFESSIONAL ENGINEER LESLIE E. ROBERTSON No 34360 UNIVERSITY OF THE STATE OF NEW YORK