WORTHINGTON, SKILLING, HELLE & JACKSON — Civil & Structural Engineers

PROJECT THE WORLD TRADE CENTER | TITLE CONNECTION DETAIL 372 A&B | DATE 6-5-67

REVISIONS

7-28-67

9-15-67

11-14-67

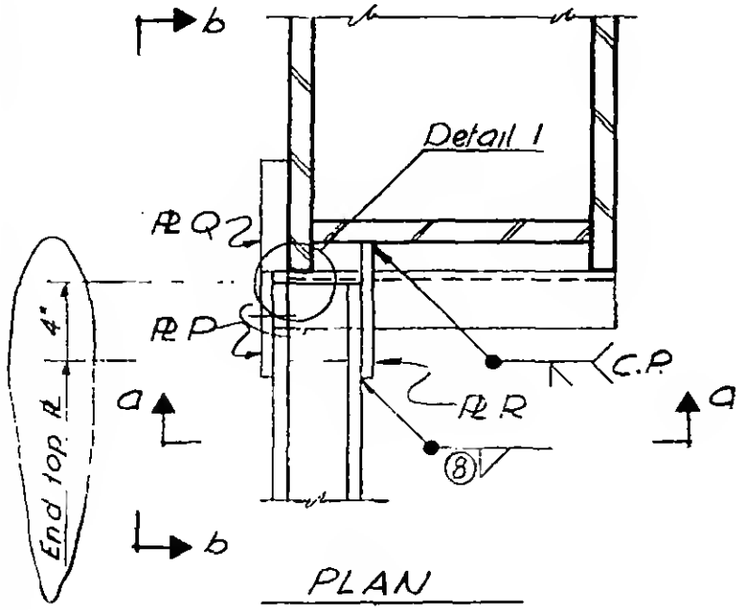

PLAN

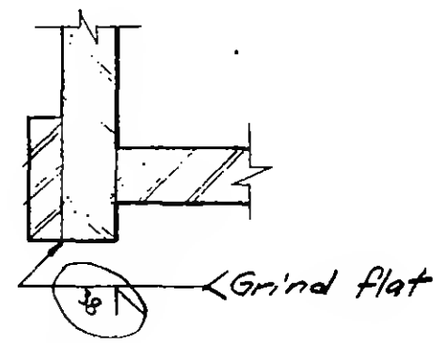

Detail 1

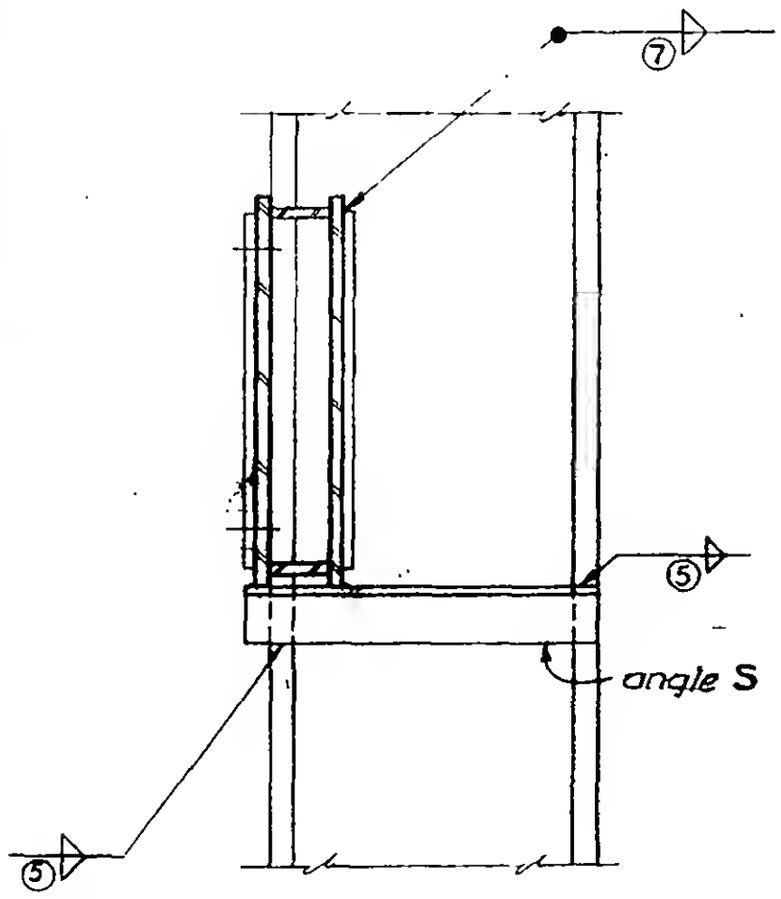

SECTION a-a

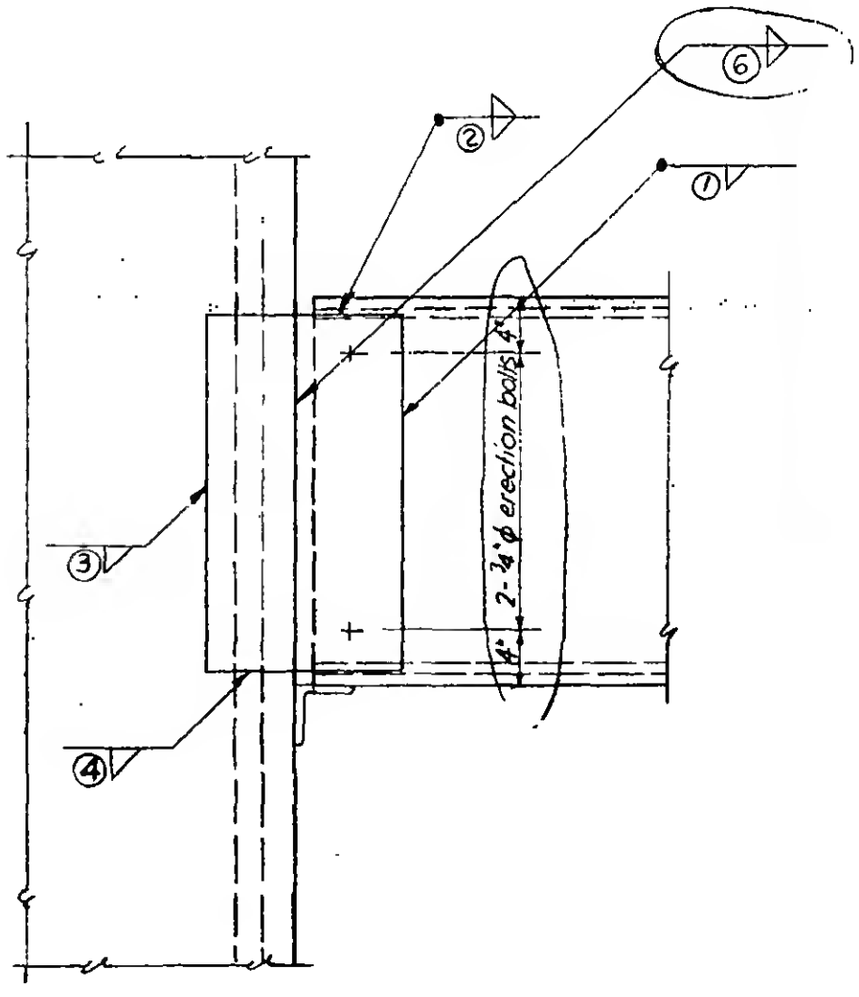

SECTION b-b

LICENSED PROFESSIONAL ENGINEER
LESLIE E. ROBERTSON
No. 34360
UNIVERSITY OF THE STATE OF NEW YORK

6-AB1-179