SKILLING - HELLE - CHRISTIANSEN - ROBERTSON Structural & Civil Engineers

PROJECT THE WORLD TRADE CENTER | TITLE CONNECTION DETAIL 381A, C | DATE 9-15-67

REVISIONS

11-23-67

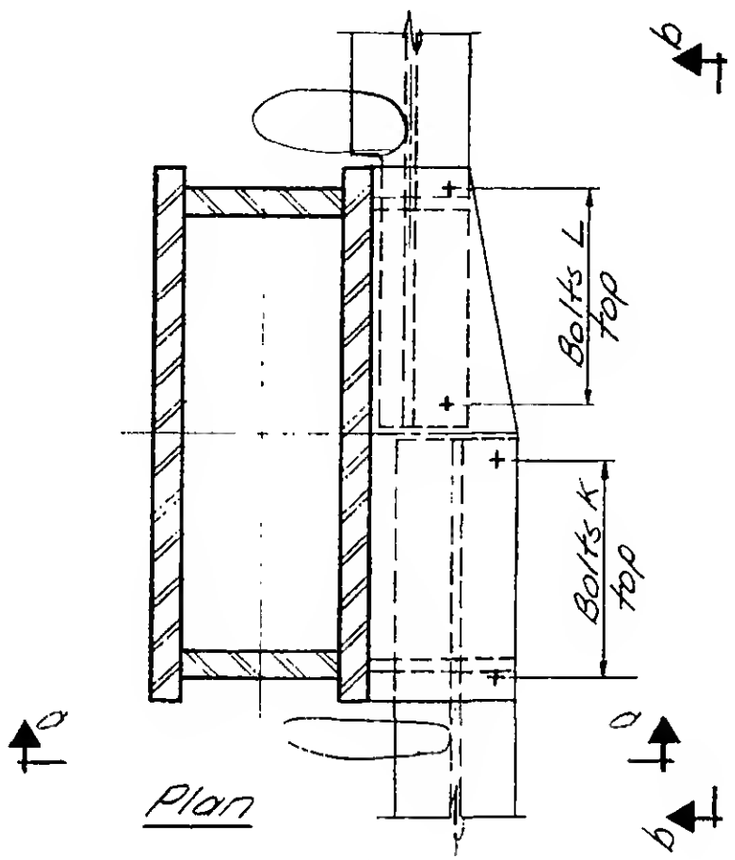

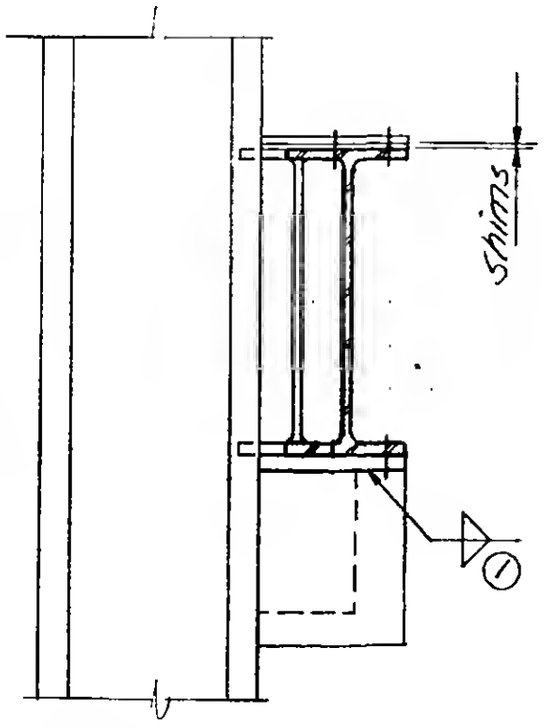

Section a-a

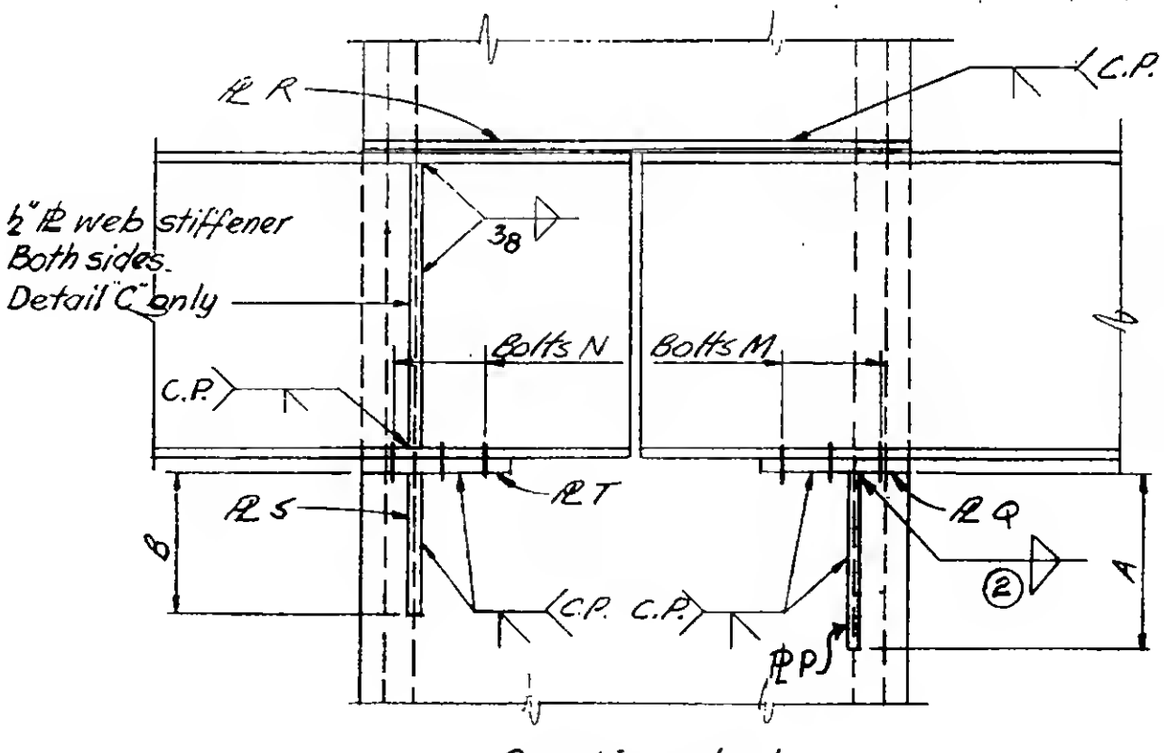

Section b-b

6-A81-188