WORTHINGTON, SKILLING, HELLE & JACKSON — Civil & Structural Engineers

PROJECT THE WORLD TRADE CENTER | TITLE CONNECTION DETAIL 382 D | DATE 7-17-68

REVISIONS

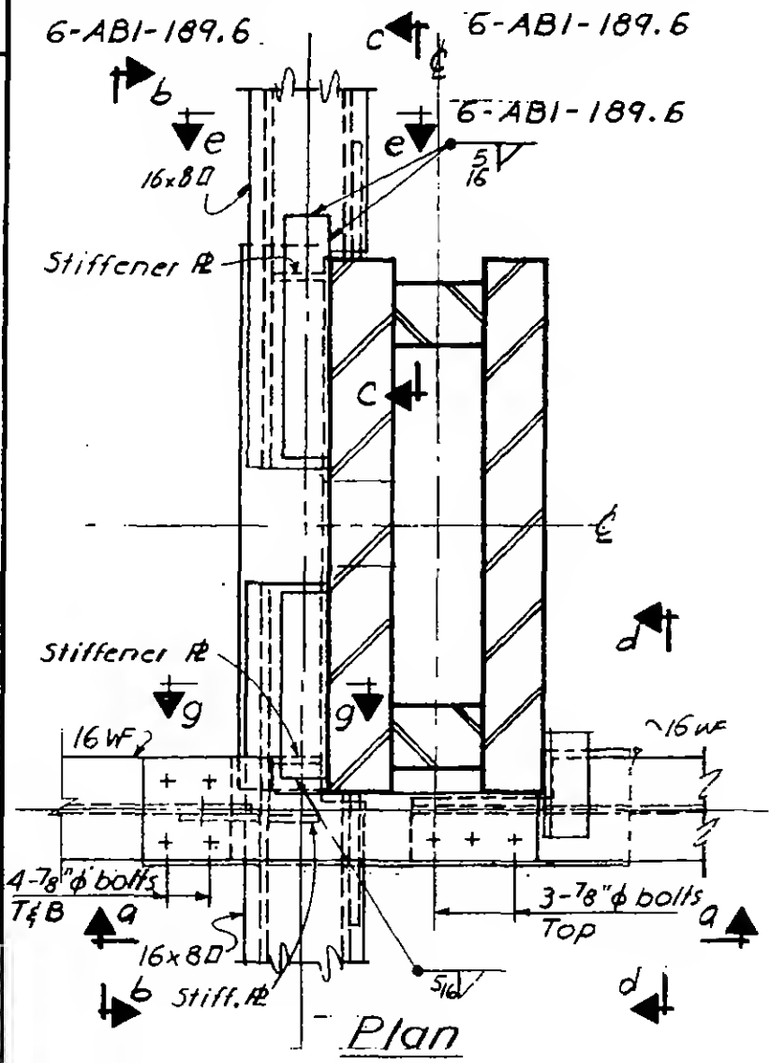

Plan

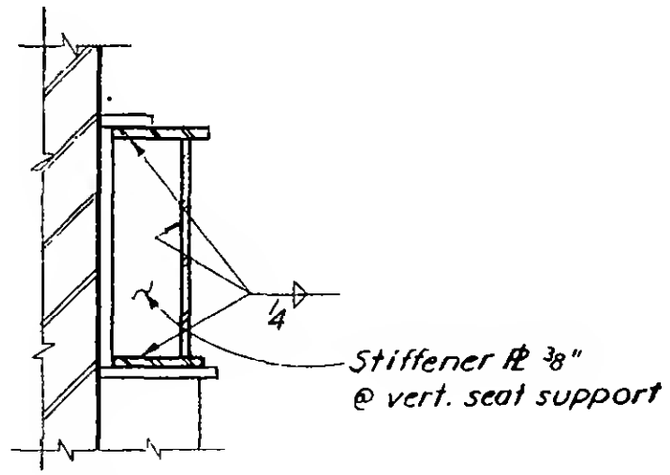

Section g-g

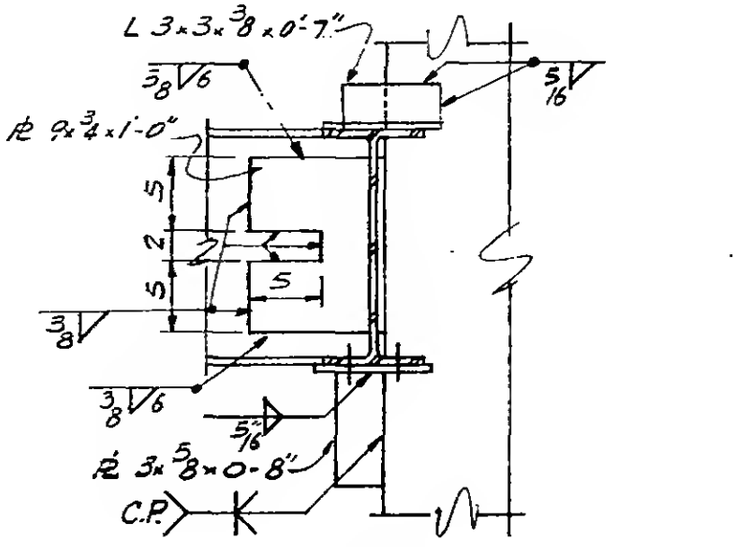

Section d-d

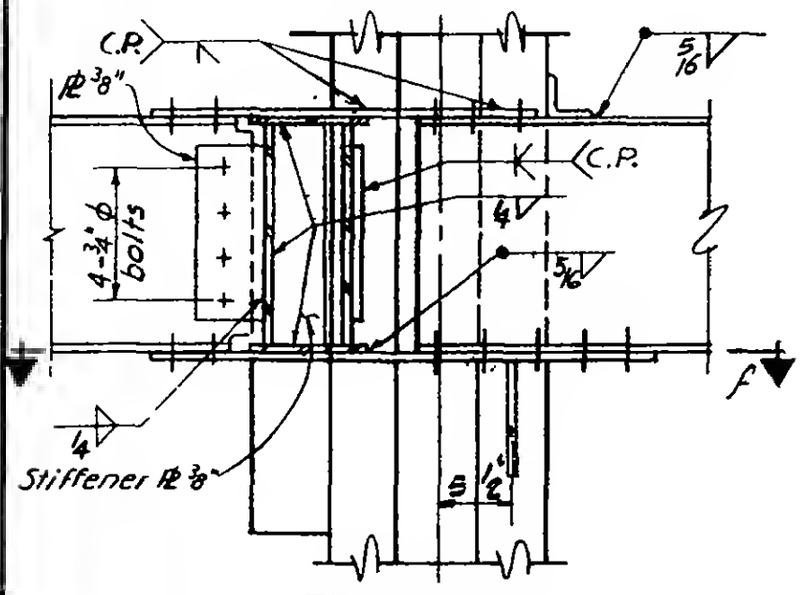

Section a-a

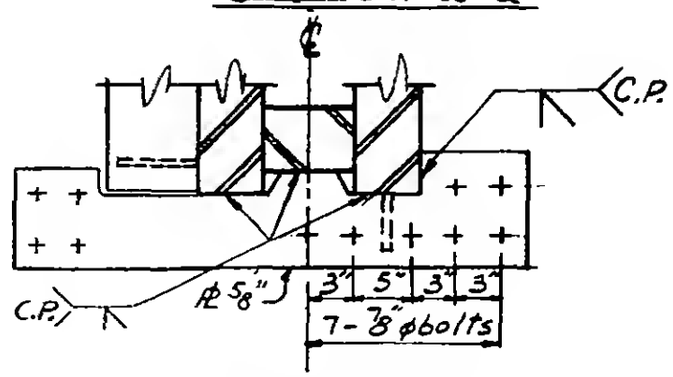

Section f-f

6-ABI-189.5

LICENSED PROFESSIONAL ENGINEER LESLIE E. ROBERTSON No. 34360 UNIVERSITY OF THE STATE OF NEW YORK