WORTHINGTON, SKILLING, HELLE & JACKSON — Civil & Structural Engineers

PROJECT THE WORLD TRADE CENTER | TITLE CONNECTION DETAIL 384 A, B | DATE 7/14/67

REVISIONS

8-5-67

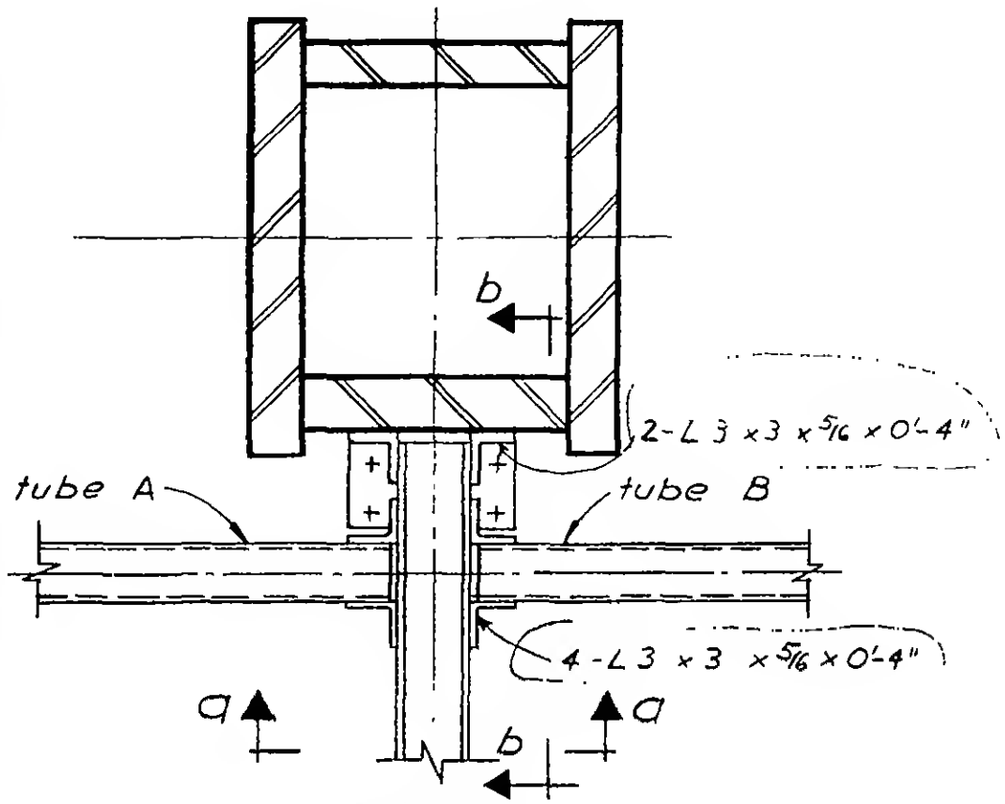

Plan

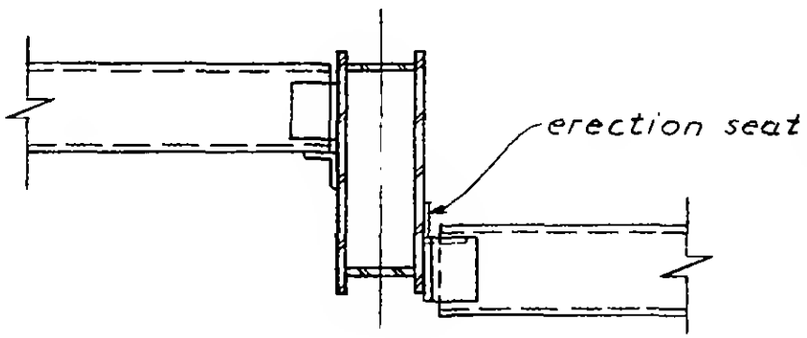

Section a-a 384 B

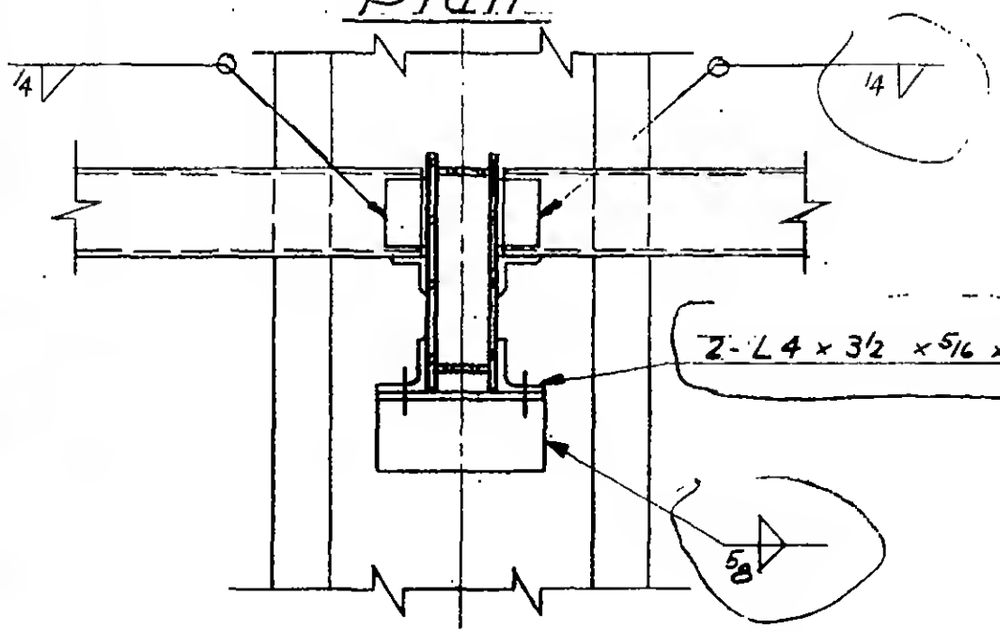

Section a-a 384 A

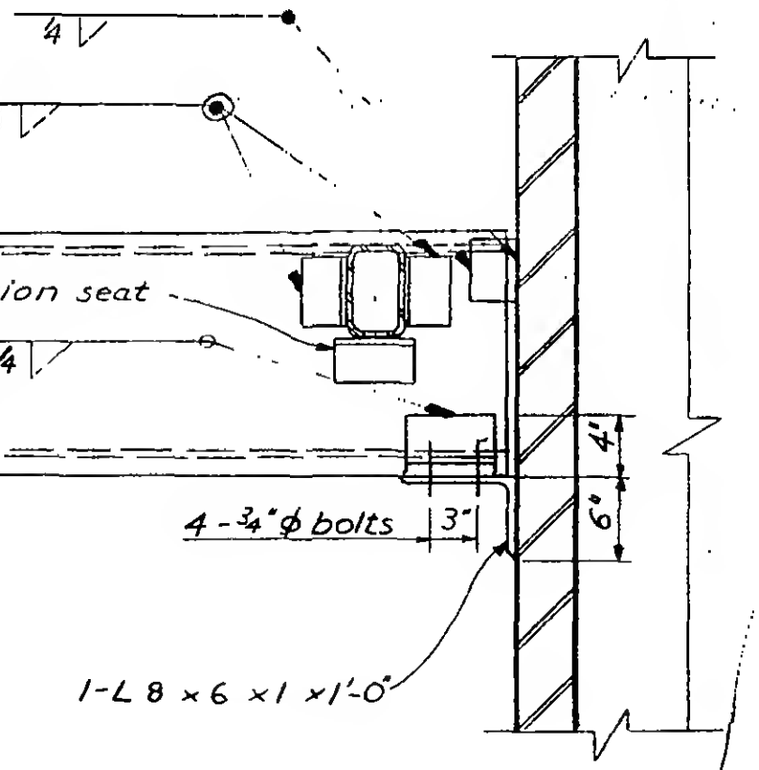

Section b-b

LICENSED PROFESSIONAL ENGINEER
LESLIE E. ROBERTSON
No. 34360
STATE OF NEW YORK

6-AB1-191