SKILLING, HELLE, CHRISTIANSEN, ROBERTSON — Structural & Civil Engineers

PROJECT: THE WORLD TRADE CENTER | TITLE: CONNECTION DETAIL 391A,C | DATE: 2-9-68

REVISIONS

7-17-68

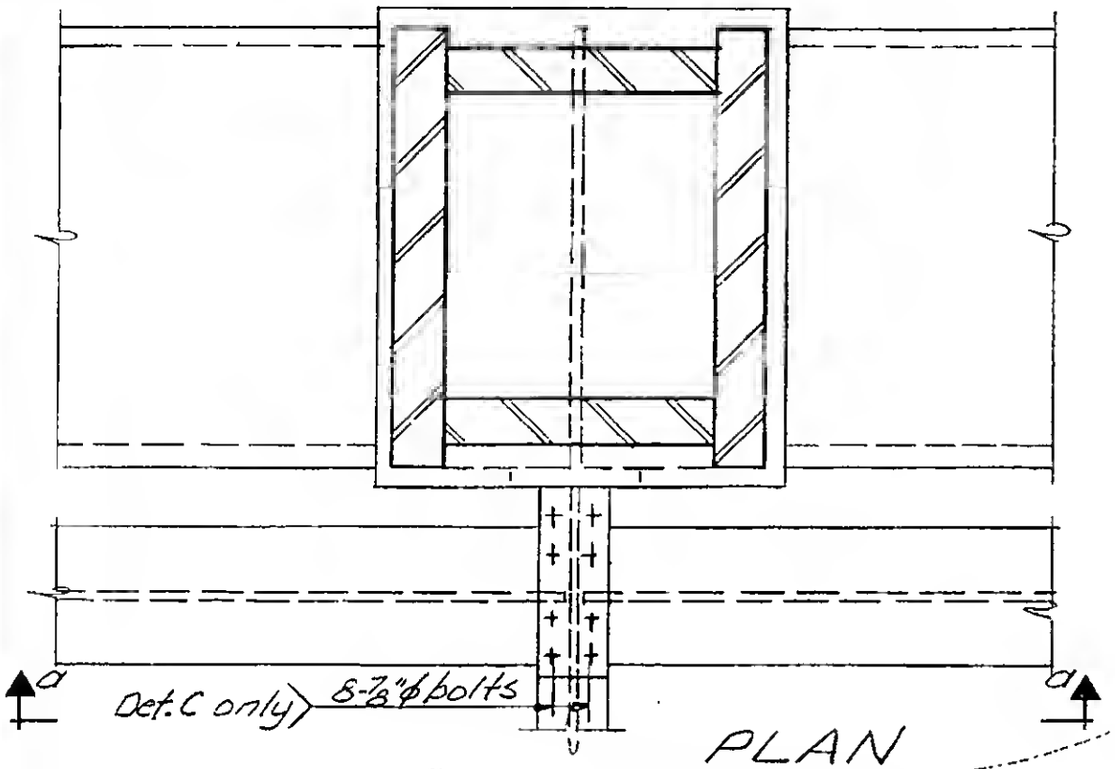

PLAN

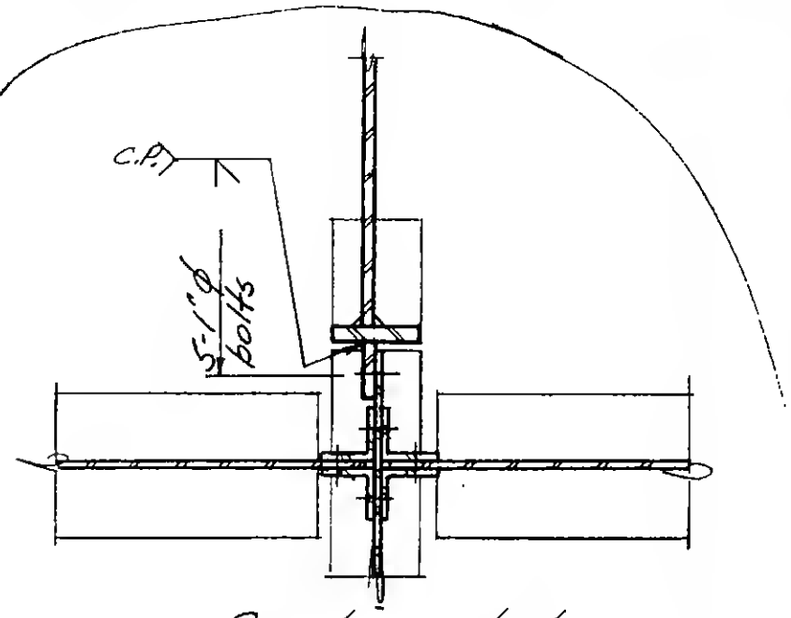

Section b-b

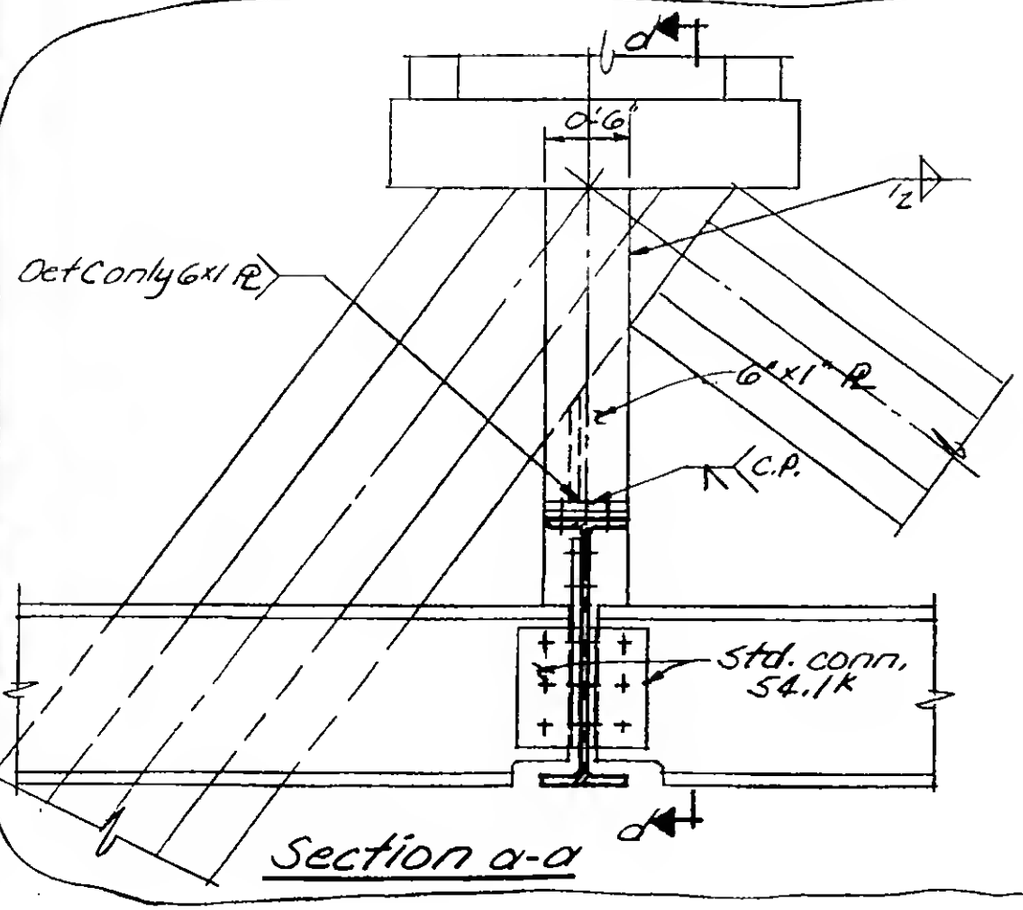

Section a-a

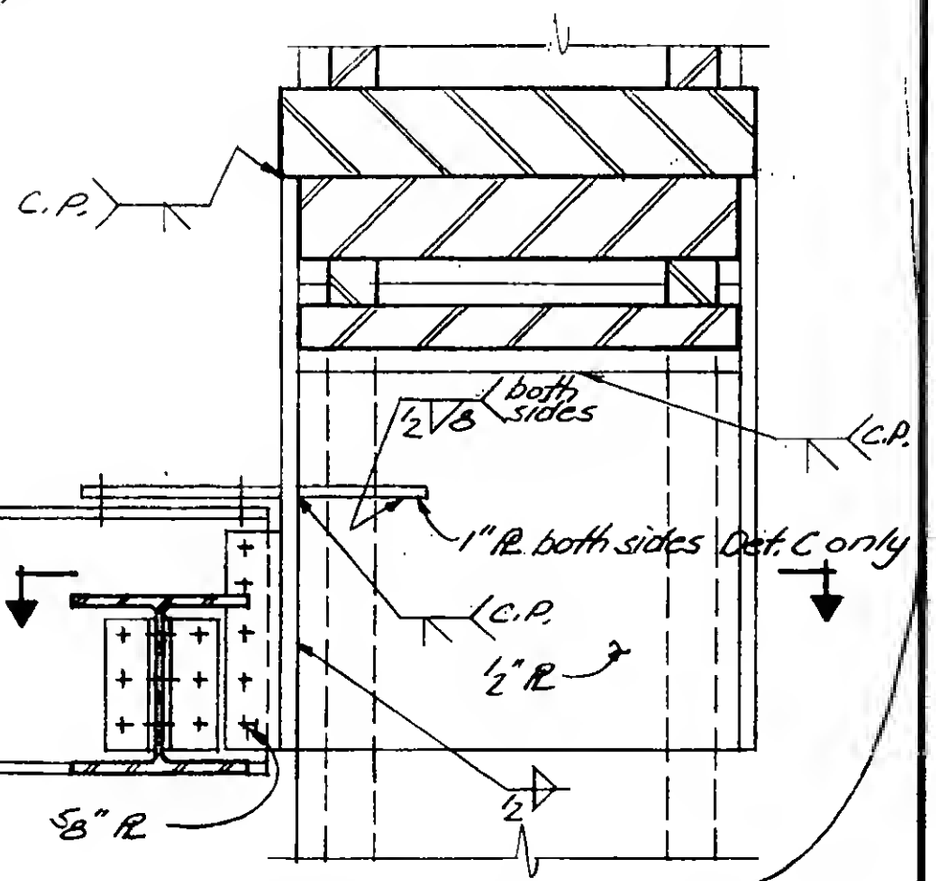

Section d-d

DESIGNED

DRAWN

REVIEWED

6-AB1-198