SKILLING - HELLE - CHRISTIANSEN - ROBERTSON Structural & Civil Engineers

PROJECT THE WORLD TRADE CENTER | TITLE CONNECTION DETAIL 393 A, B | DATE 9-15-67

REVISIONS

11-10-67

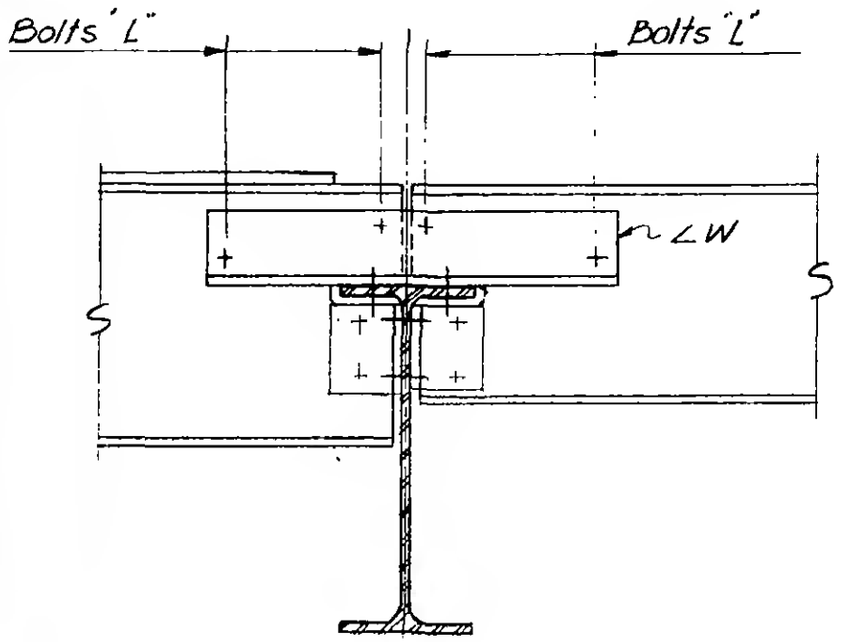

Section C-C

Detail 393 A only

Section C-C

Detail 393B only

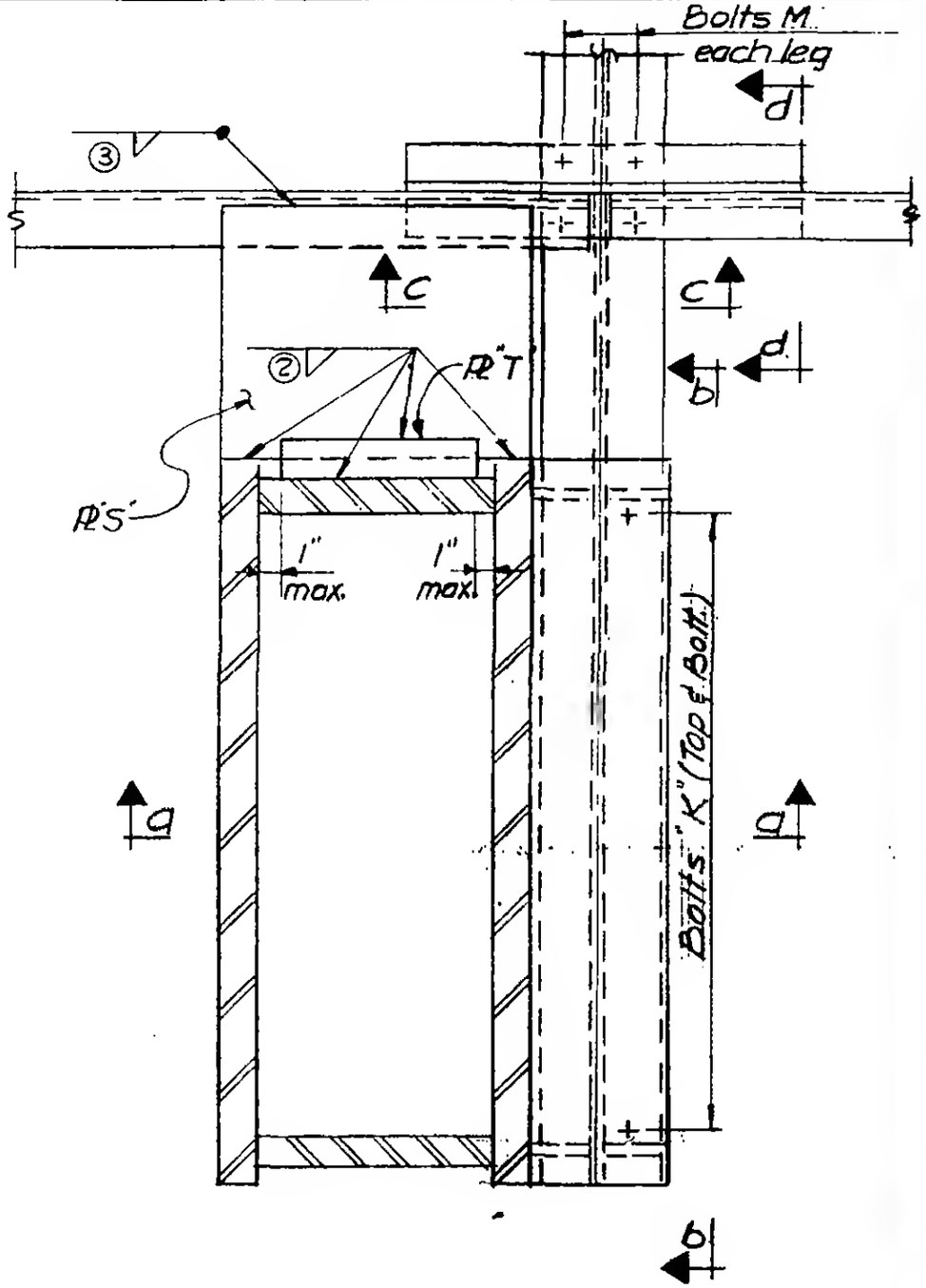

Plan

FOR SECTION a-a & b-b SEE DWG. 6-AB1-200.1

LICENSED PROFESSIONAL ENGINEER
LESLIE E. ROBERTSON
No. 34360
UNIVERSITY OF THE STATE OF NEW YORK

6-AB1-200