SKILLING - HELLE - CHRISTIANSEN - ROBERTSON Structural & Civil Engineers

PROJECT THE WORLD TRADE CENTER | TITLE CONNECTION DETAIL 393,A,B | DATE 9-15-67

REVISIONS

11-10-67

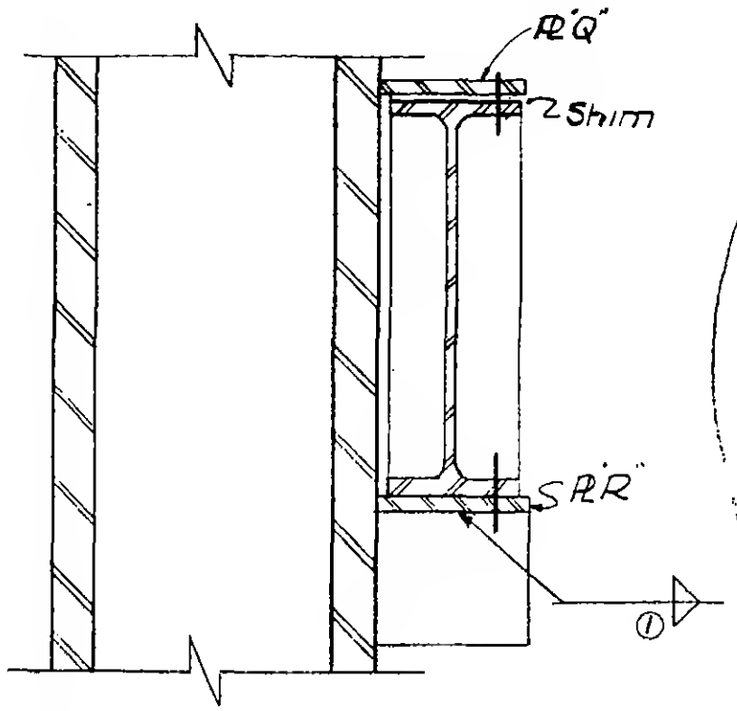

Section a-a

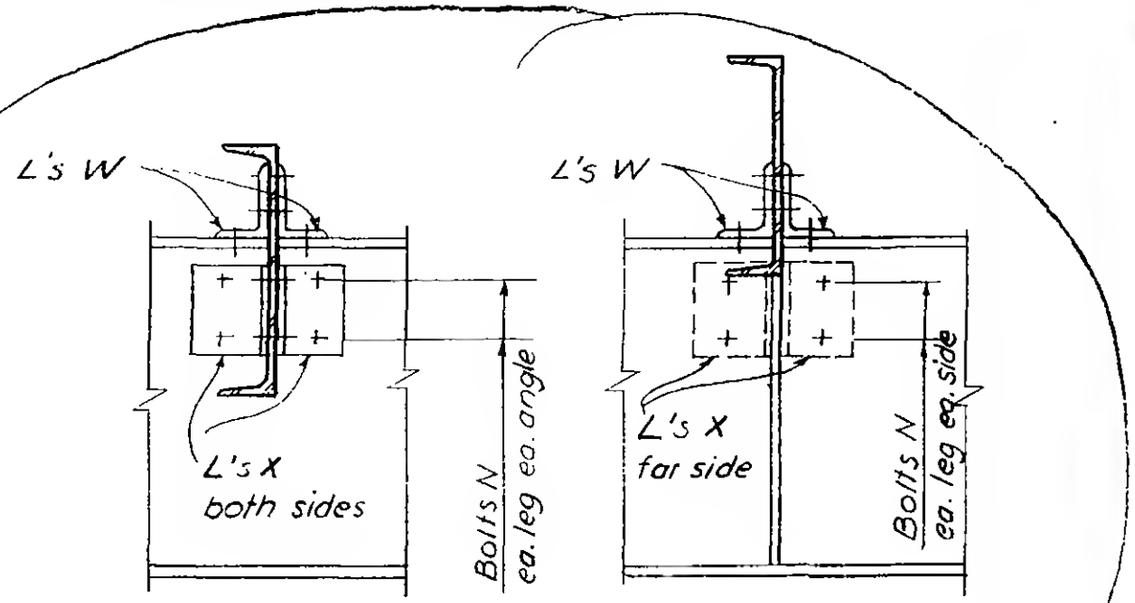

Section d-d
Detail 393 A only

Section d-d
Detail 393 B only

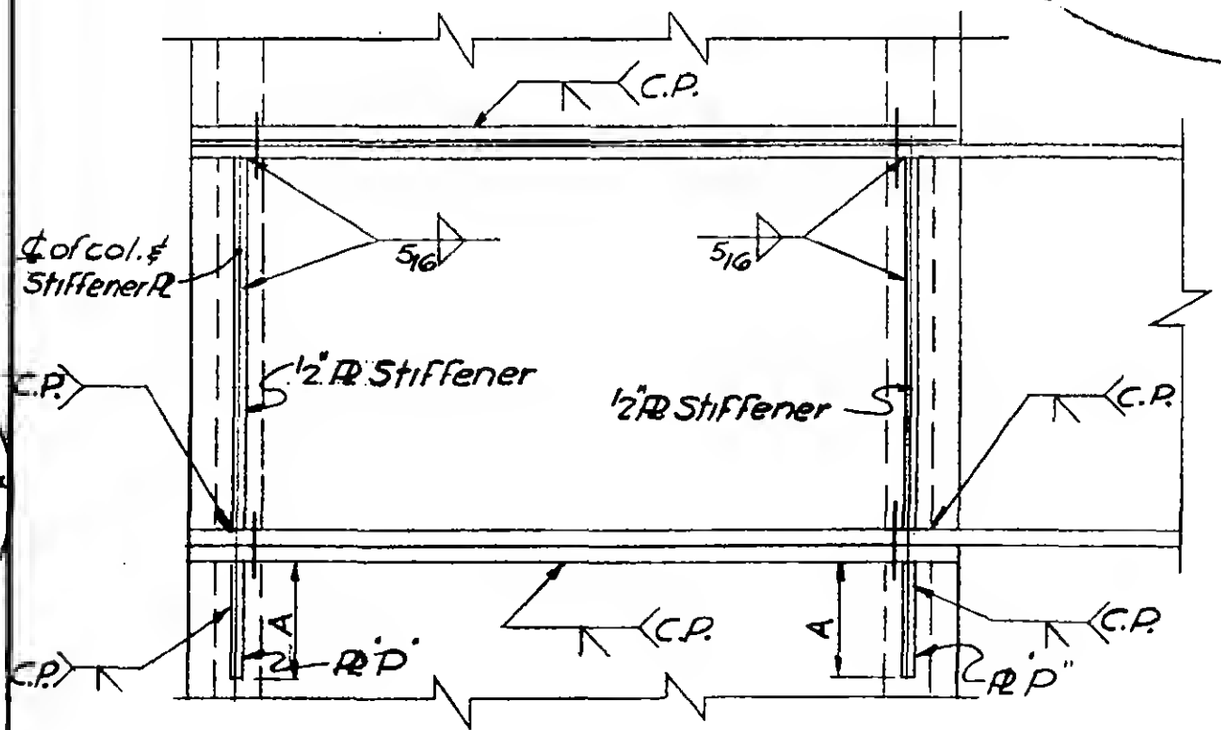

Section b-b

LICENSED PROFESSIONAL ENGINEER
LESLIE E. ROBERTSON
No. 34960
UNIVERSITY OF THE STATE OF NEW YORK

G-ABI-200.1