SKILLING - HELLE - CHRISTIANSEN - ROBERTSON Structural & Civil Engineers

PROJECT THE WORLD TRADE CENTER | TITLE CONNECTION DETAIL 397A | DATE 9-29-67

REVISIONS

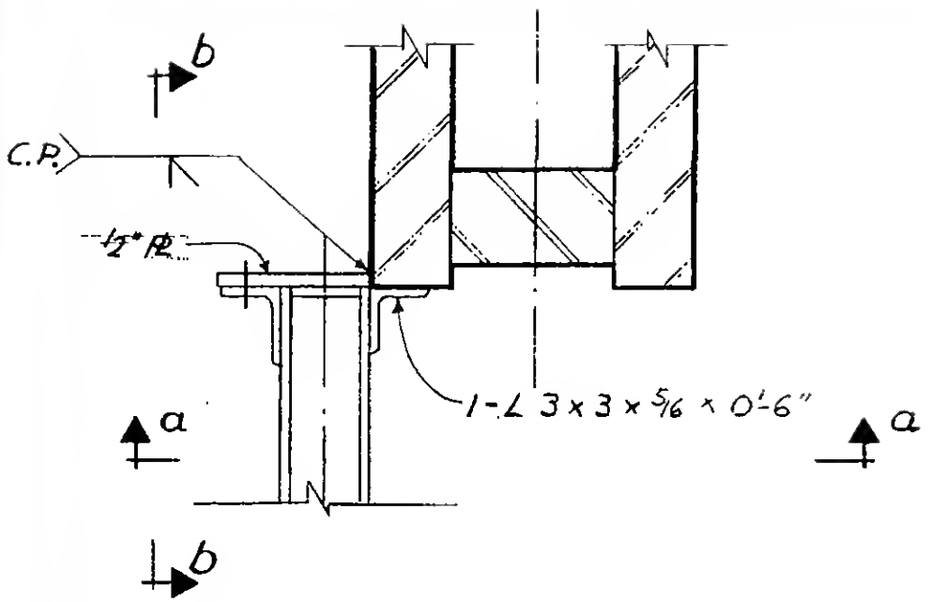

Plan

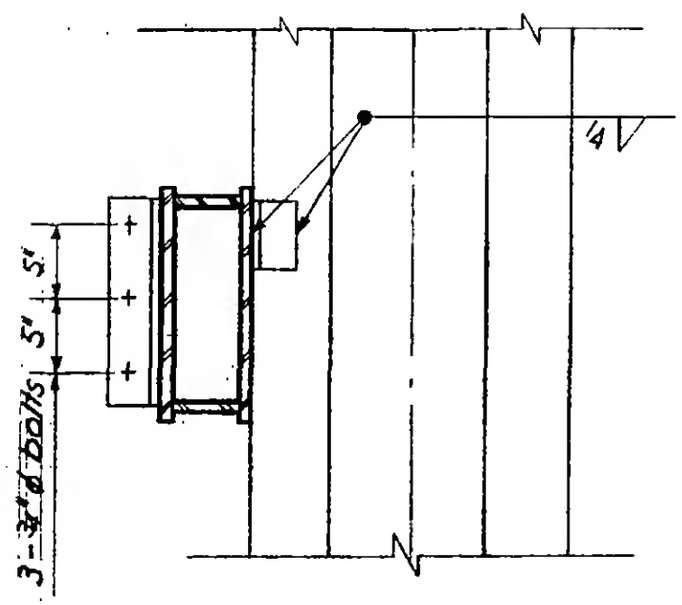

Section a-a

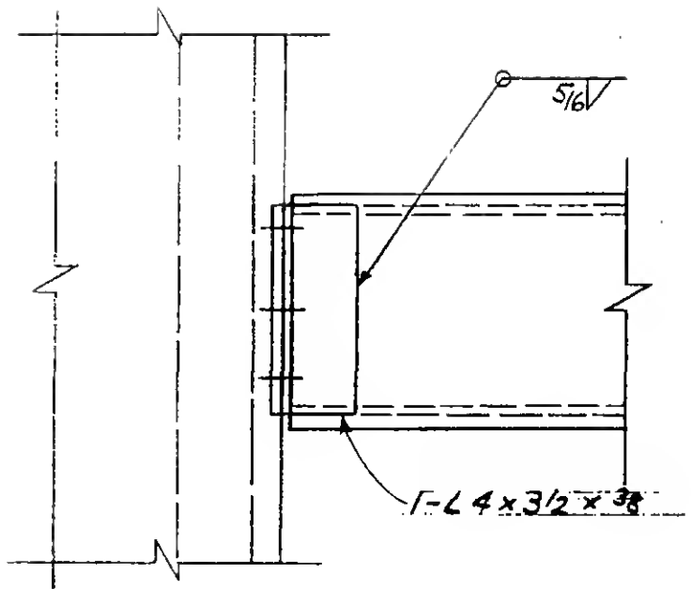

Section b-b

LICENSED PROFESSIONAL ENG NEER
LESLIE E. ROBERTSON
No. 34360
STATE OF THE STATE OF NEW YORK

6-AB1-204