WORTHINGTON, SKILLING, HELLE & JACKSON — Civil & Structural Engineers

PROJECT: THE WORLD TRADE CENTER | TITLE: CONNECTION DETAIL 702 | DATE: 6-12-67

REVISIONS

6-30-67

For SECTIONS X-X, Y-Y
See DWG. 6-ABI-234

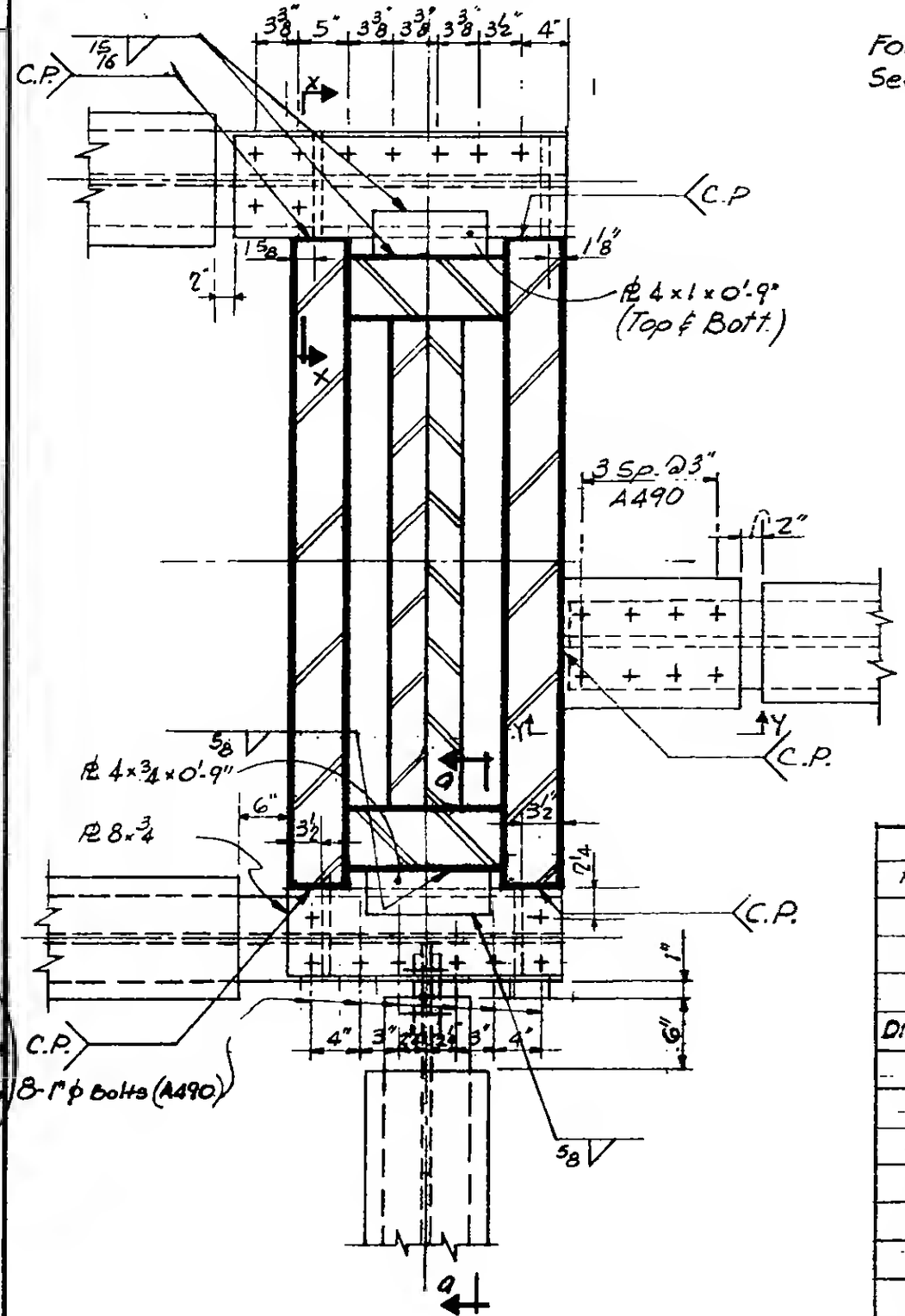

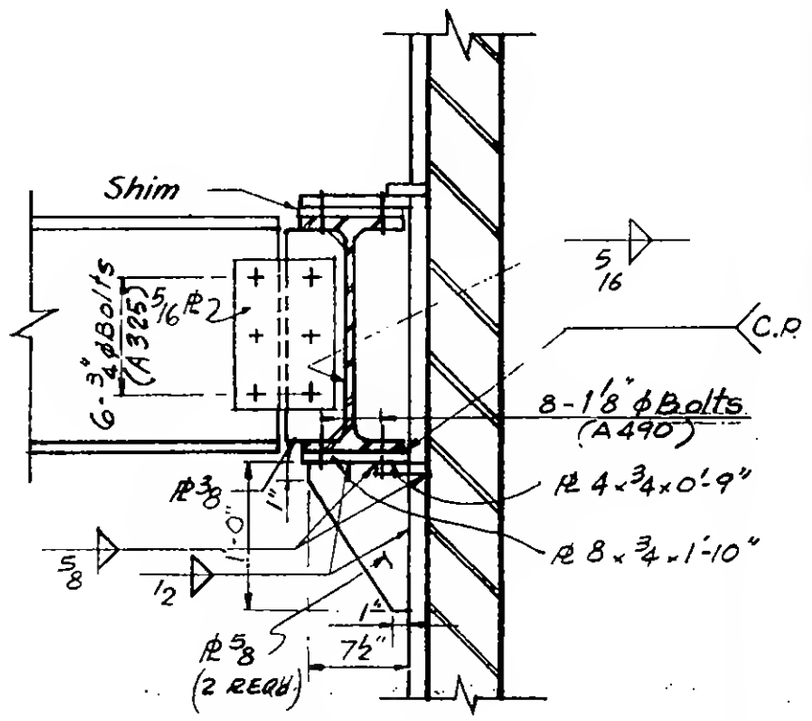

Section a-a

	SECTION X-X	SECTION Y-Y
PLATES		
PL P	2-PLs-8 1/4" x 3/4"	8" x 7/8"
PL Q	8 3/4" x 1"	8" x 1"
PL R	8 1/2" x 1"	8" x 1"
DIMENSIONS		
A	2'-4 3/4"	1'-1 3/4"
B	1'-0"	1'-4"
BOLTS		
K	9-1 1/8" ϕ (A490)	8-1" ϕ (A490)
L	9-1 1/8" ϕ (A490)	8-1" ϕ (A490)
WELDS		
①	9/16	5/8
②	9/16	5/8
③	C.P.	C.P.
⑤	15/16	—
⑥	15/16	—

LICENSED PROFESSIONAL ENGINEER
LESLIE E. ROBERTSON
No. 34360
UNIVERSITY OF THE STATE OF NEW YORK

6-ABI-208