SKILLING - HELLE - CHRISTIANSEN - ROBERTSON Structural & Civil Engineers

PROJECT THE WORLD TRADE CENTER | TITLE CONNECTION DETAIL 703B, 703C | DATE 2-9-68

REVISIONS

3-11-68

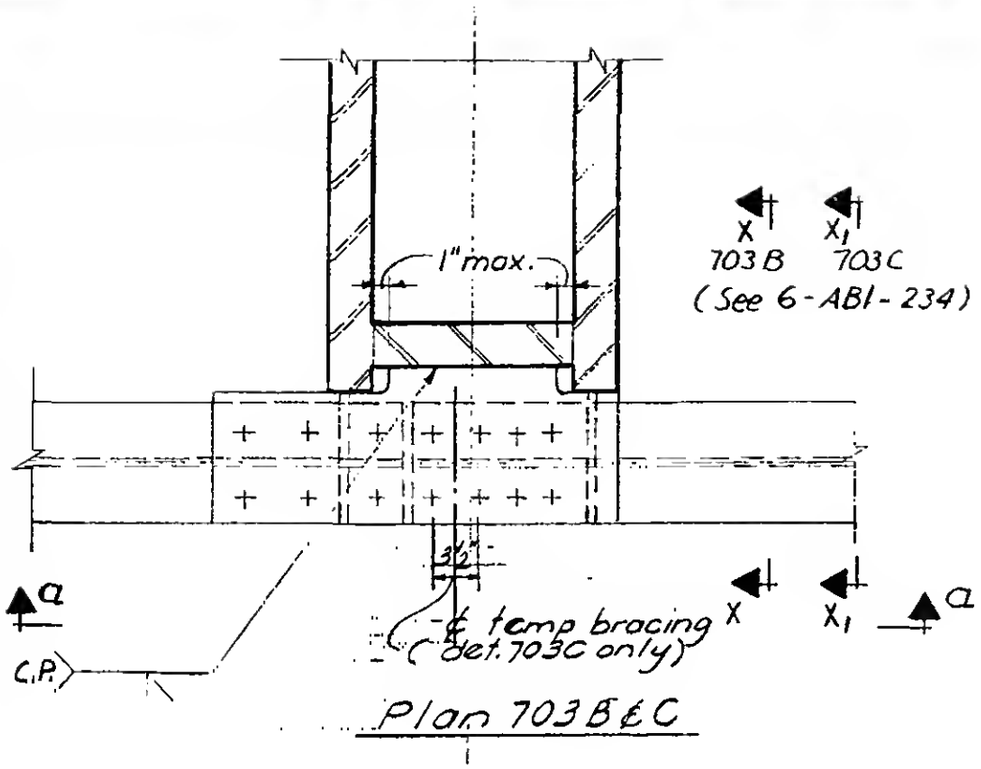

Plan 703B&C

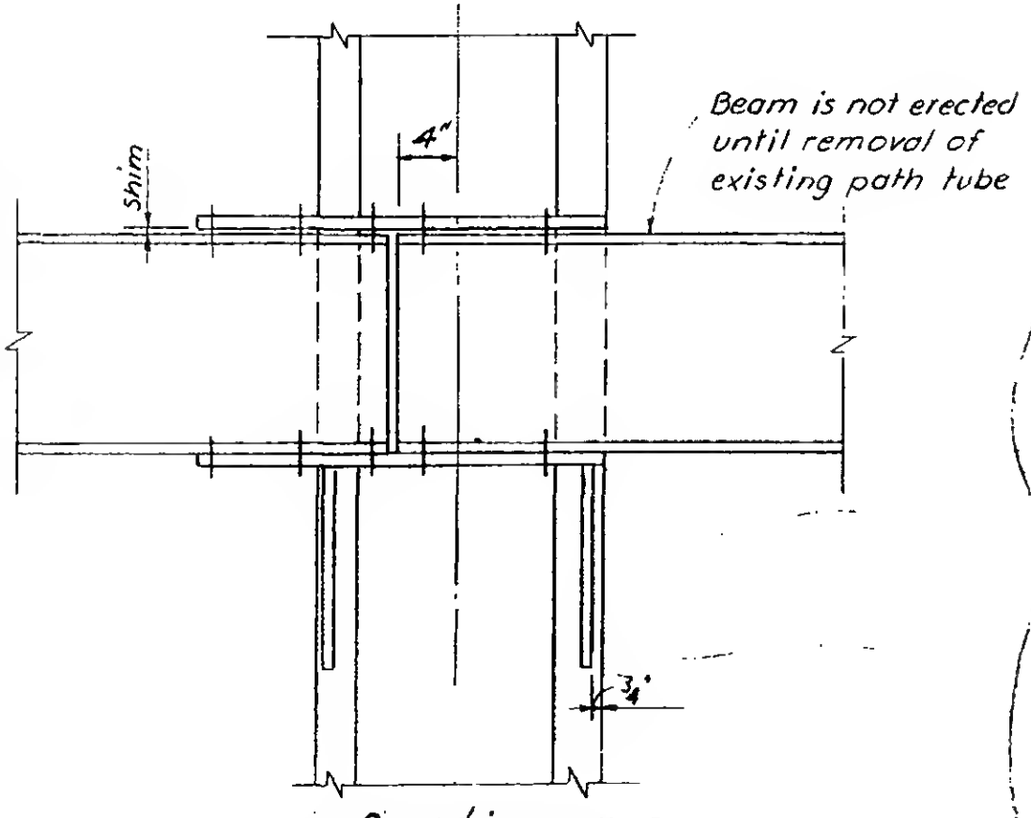

Section a-a
(After removal of path tube)

SCHEDULE		
	Section x-x	Section x1-x1
PLATES		
P	2 Pls 8¼" x ¾"	2 Pls 8" x ⅝"
Q	10½" x 1"	8" x ¾"
R	10½" x 1"	8" x ¾"
DIMENSION		
B	1'-0"	0'-9"
BOLTS		
K	16 - 1⅛"ϕ (A490)	12 - 1"ϕ (A490)
L	16 - 1⅛"ϕ (A490)	12 - 1"ϕ (A490)
WELDS		
1	9/16	½
②	9/16	½
③	C.P	C.P.
④	—	—
⑤	—	—
⑥	—	—
⑦	—	—

For section X-X, X1-X1 see Dwg. 6-ABI-234

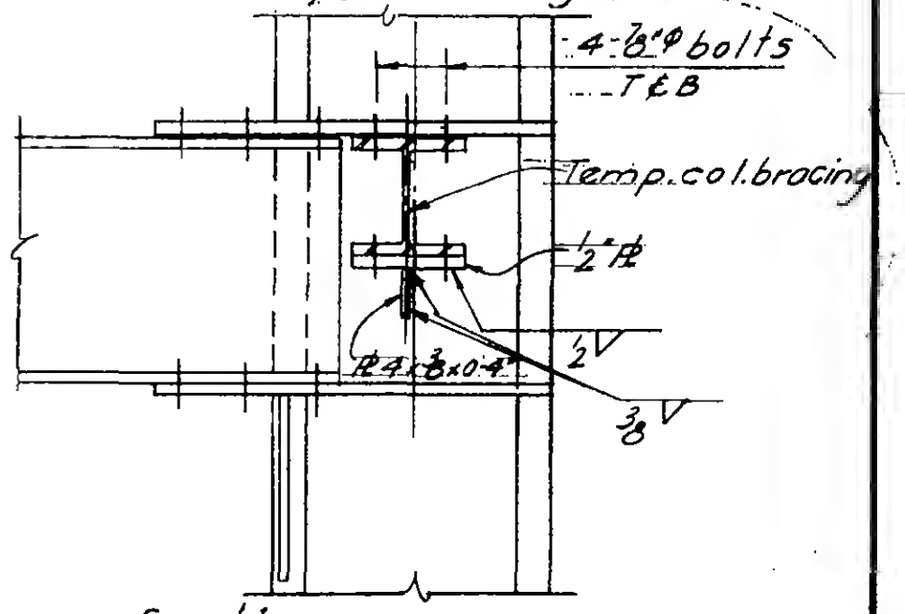

Section a-a
(Before removal)

6-ABI-209.1

LICENSED PROFESSIONAL ENGINEER
LESLIE E. ROBERTSON
No. 34360
UNIVERSITY OF THE STATE OF NEW YORK