WORTHINGTON, SKILLING, HELLE & JACKSON — Civil & Structural Engineers

PROJECT THE WORLD TRADE CENTER | TITLE CONNECTION DETAIL 704 | DATE 6-12-67

REVISIONS

6-30-67

NOTE:
For SECTION Y-Y, Y1-Y1, Y2-Y2
See Dwg. 6-AB1-234

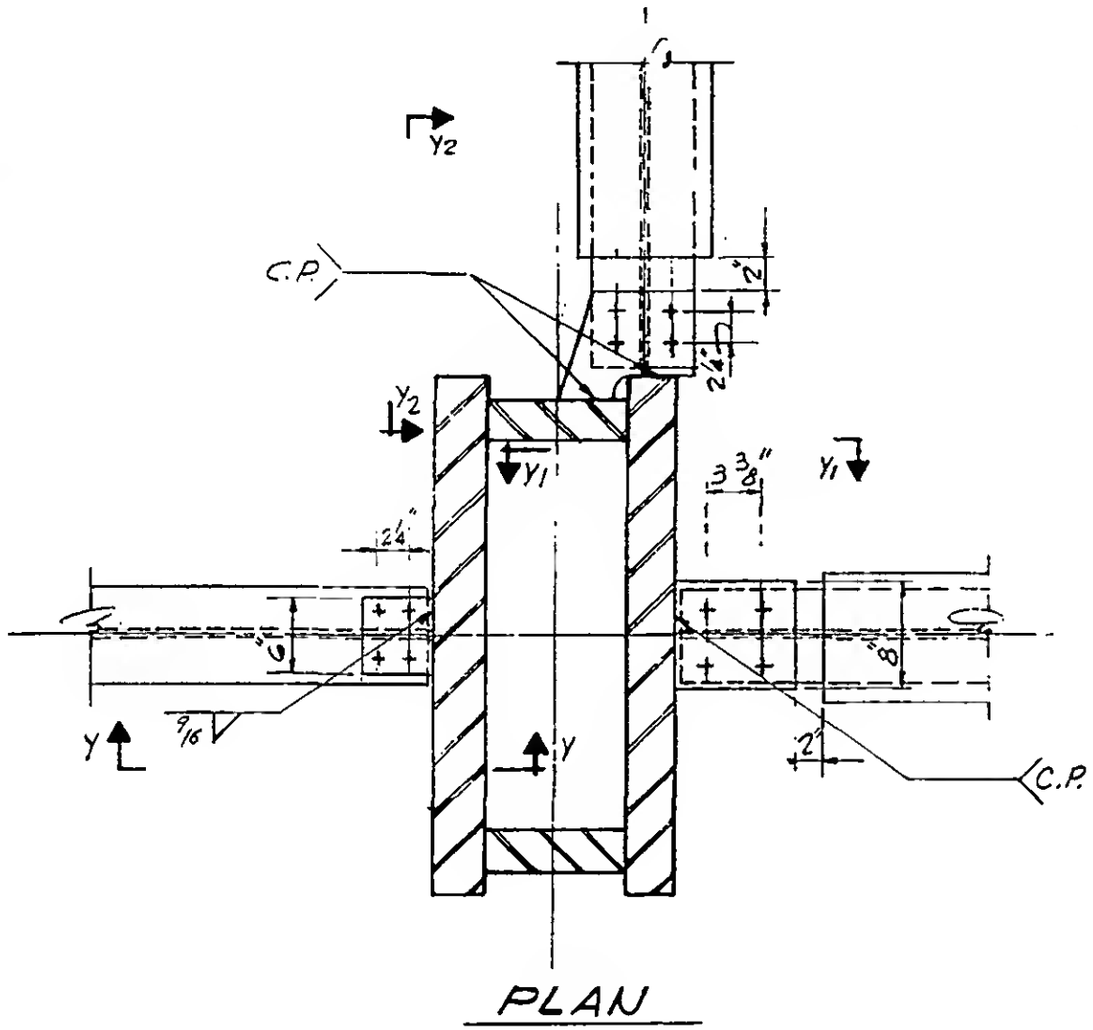

PLAN

	SECTION Y-Y	SECTION Y1-Y1	SECTION Y2-Y2
PLATES			
℄ P	5½"×½"	6"×⅝"	5½"×½"
℄ Q	6¼"×⅝"	9"×¾"	Same as ℄ R
℄ R	6¼"×⅝"	9"×¾"	½"
DIMENSIONS			
A	0'-10¼"	0'-11"	3'-2¼"
B	0'-6"	1'-0"	0'-8"
BOLTS			
K	4-¾"ϕ (A325)	4-1⅛"ϕ (A490)	4-¾"ϕ (A325)
L	4-¾"ϕ (A325)	4-1⅛"ϕ (A490)	4-¾"ϕ (A325)
WELDS			
①	⅜	½	⅜
②	⅜	½	⅜
③	—	C.P.	C.P.
④	9/16	—	—

LICENSED PROFESSIONAL ENGINEER
LESLIE E. ROBERTSON
No. 34360
UNIVERSITY OF THE STATE OF NEW YORK

G-AB1-210