SKILLING - HELLE - CHRISTIANSEN - ROBERTSON Structural & Civil Engineers

PROJECT THE WORLD TRADE CENTER | TITLE CONNECTION DETAIL 705B, 705C | DATE 2-9-68

REVISIONS

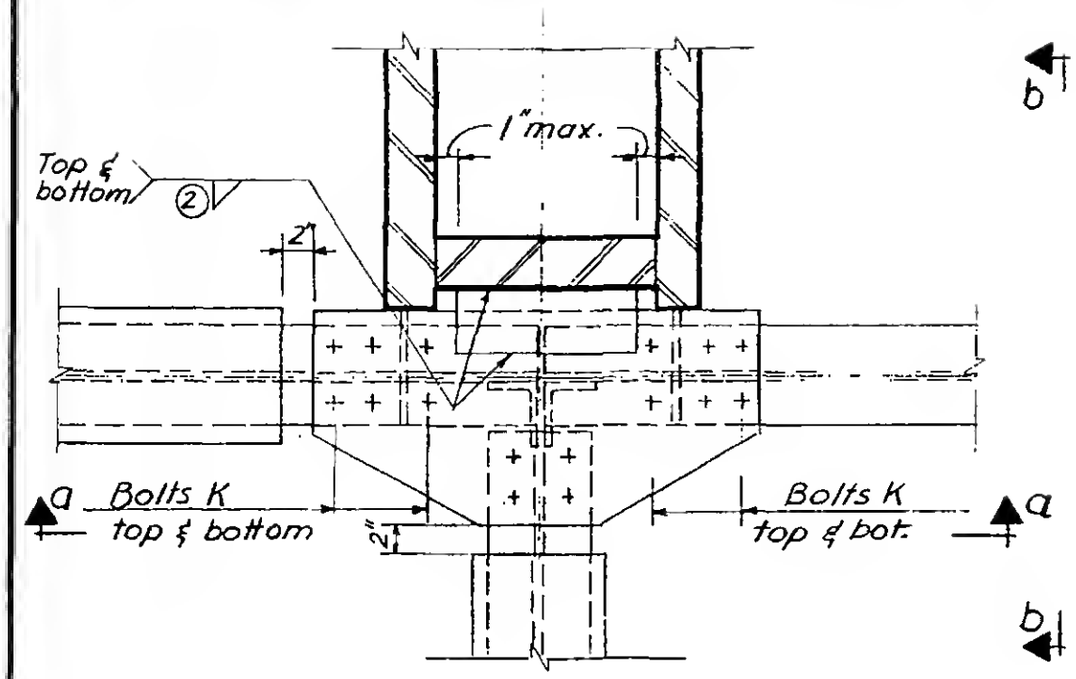

Plan

	705 B	705 C
PLATES		
P	2 Pls 8" x 5/8"	2 Pls 8" x 5/8"
Q	1/4"	1"
R	3" x 7/8"	4" x 1"
DIMENSION		
B	0'-9"	1'-0"
BOLTS		
K	6-1"ϕ (A490)	8-1 1/8"ϕ (A490)
L	8-7/8"ϕ (A325)	8-7/8"ϕ (A325)
WELDS		
①	1/2	1/2
②	7/8	15/16
Std. Conn.	39.8 k	70.7 k

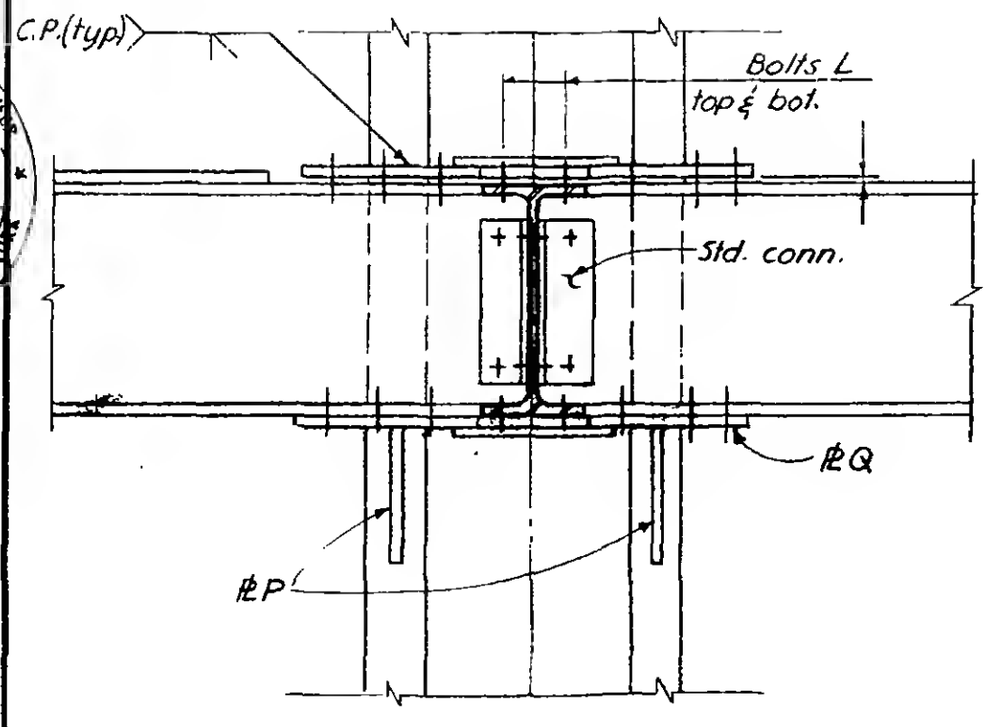

Section a-a

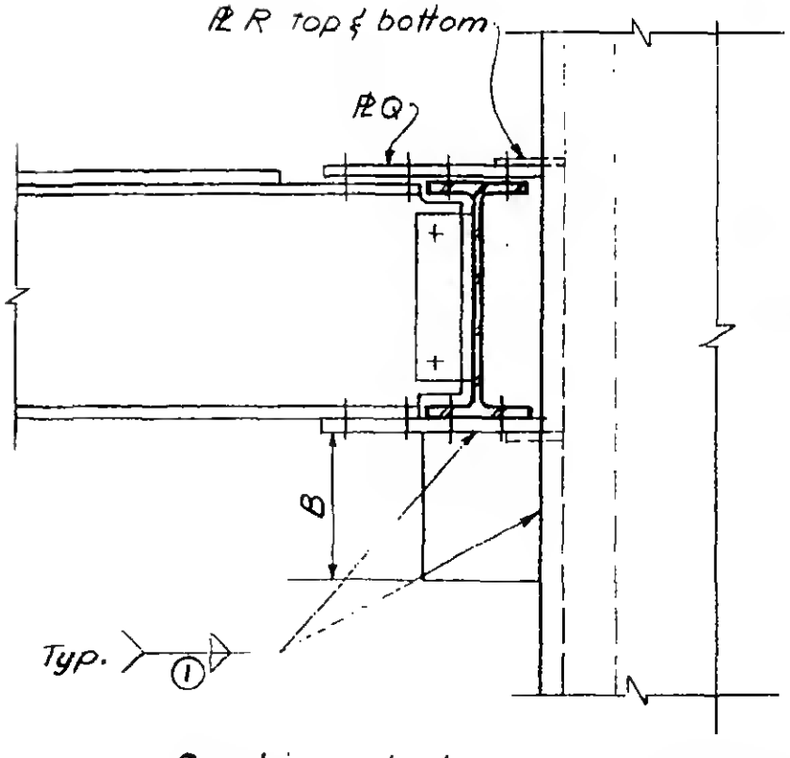

Section b-b

LICENSED PROFESSIONAL ENGINEER LESLIE E. ROBERTSON No. 34760 UNIVERSITY OF THE STATE OF NEW YORK

6-ABI-211.1