SKILLING - HELLE - CHRISTIANSEN - ROBERTSON Structural & Civil Engineers

PROJECT THE WORLD TRADE CENTER | TITLE CONNECTION DETAIL 709C, 709D | DATE 2-9-68

REVISIONS

All Details not shown
same as Det. 709, 6-ABI-215.

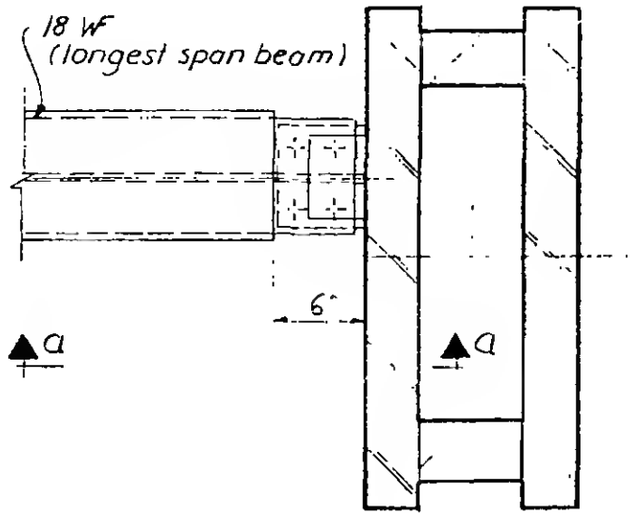

Plan

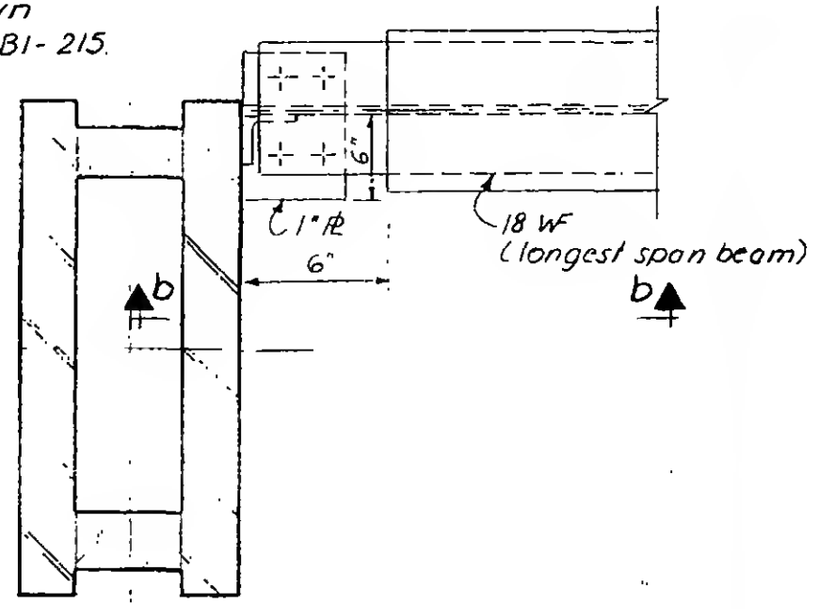

Plan

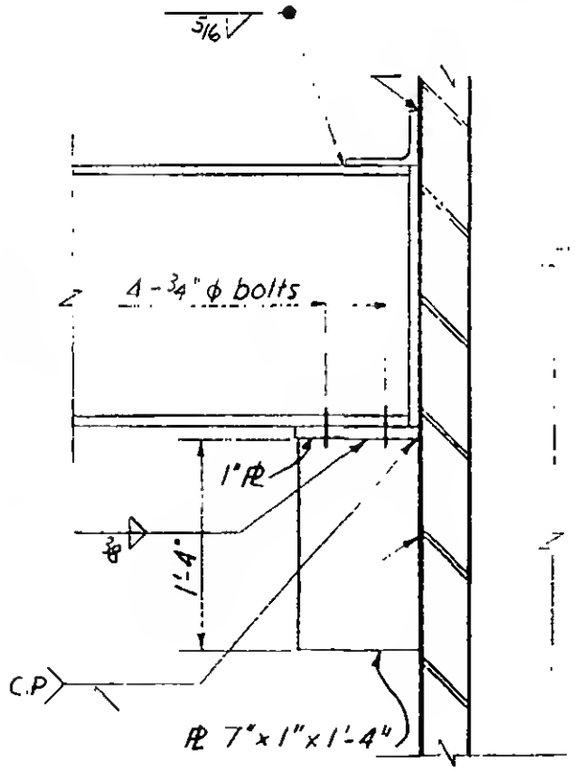

Section a-a

Detail 709C

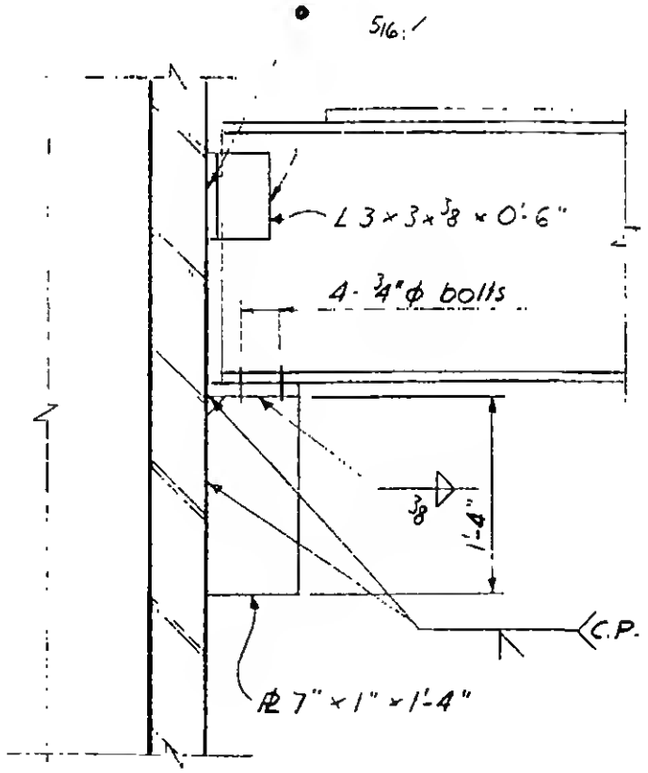

Section b-b

Detail 709D

LICENSED PROFESSIONAL ENGINEER
LESLIE E. ROBERTSON
No. 34360
UNIVERSITY OF THE STATE OF NEW YORK

6-ABI-215.1