SKILLING - HELLE - CHRISTIANSEN - ROBERTSON Structural & Civil Engineers

PROJECT THE WORLD TRADE CENTER | TITLE CONNECTION DETAIL 711 B, C | DATE 2-9-68

REVISIONS

	Section y-y	Section y_1-y_1	Section z-z	Section z_1-z_1
PLATES				
PL P	8" × 5/8"	5 1/2" × 5/8"	8" × 5/8"	5 1/2" × 5/8"
PL Q	3/4"	3/4"	5/8"	5/8"
PL R	3/4"	3/4"	—	—
DIMENSIONS				
B	1'-1"	0'-11"	1'-1"	0'-11"
BOLTS				
K	8-7/8" φ	8-7/8" φ	—	—
L	8-7/8" φ	8-7/8" φ	4-3/4" φ	4-3/4" φ
WELDS				
1	1/2	1/2	1/2	1/2
2	1/2	1/2	1/2	1/2
3	C.P.	C.P.	C.P.	C.P.

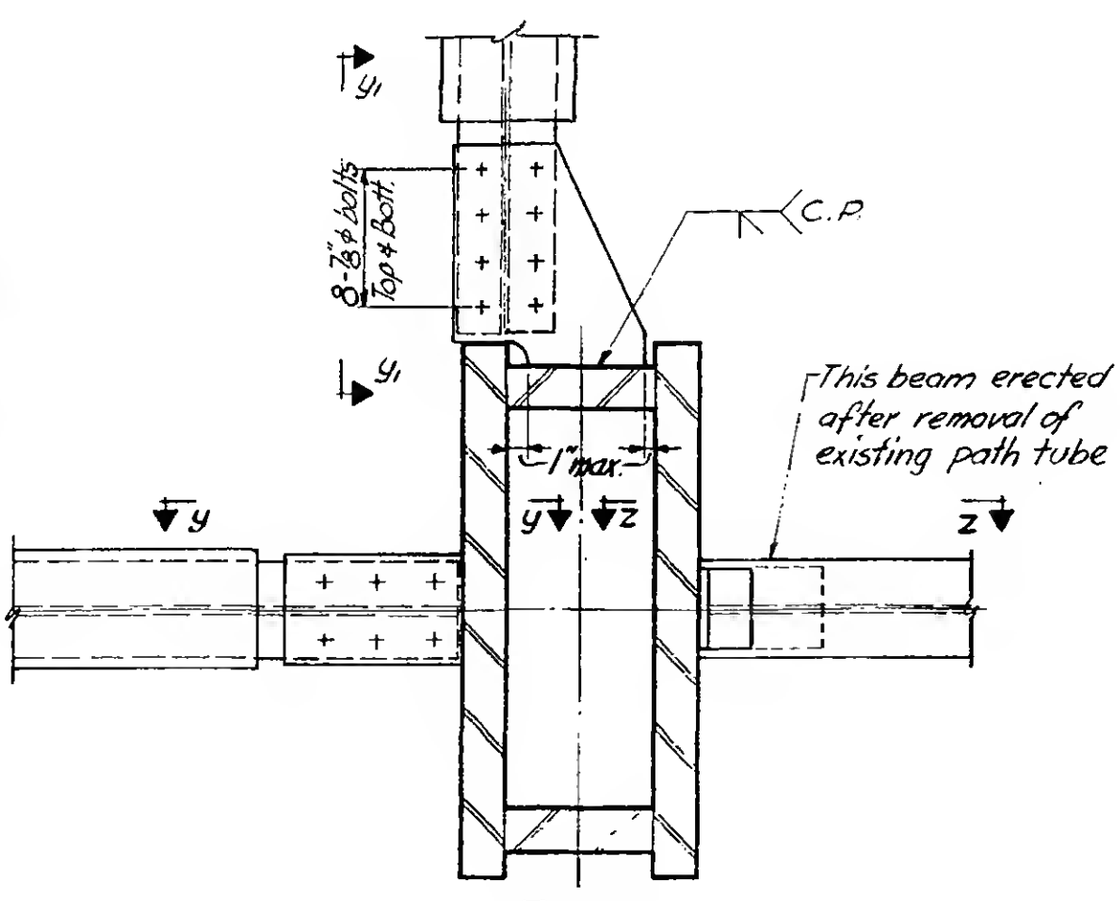

711 B

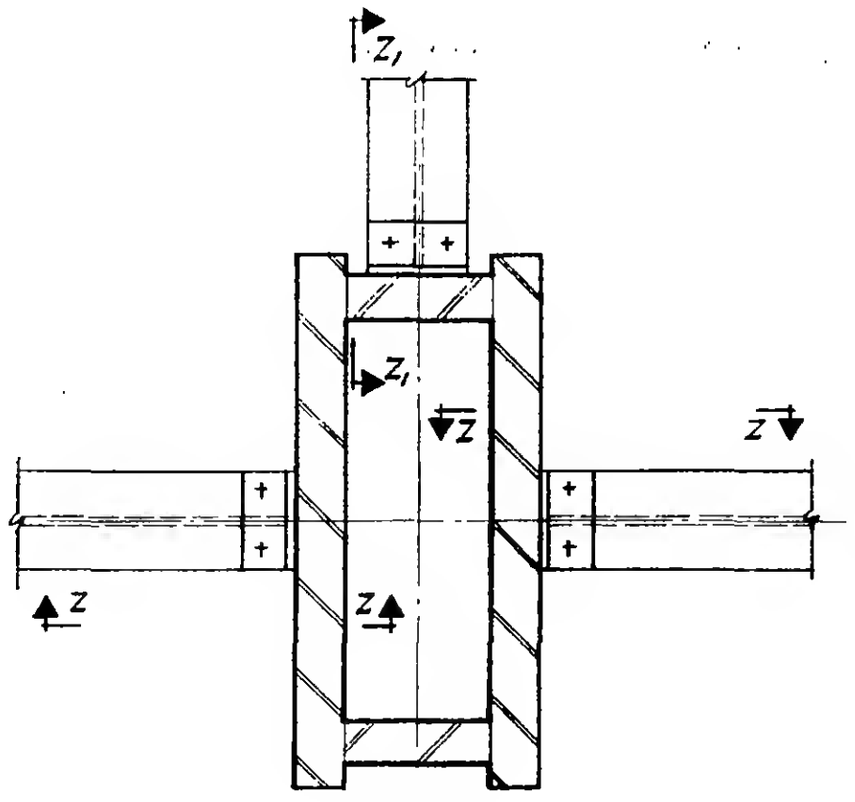

711 C

6-AB1-217.1