WORTHINGTON, SKILLING, HELLE & JACKSON — Civil & Structural Engineers

PROJECT THE WORLD TRADE CENTER | TITLE CONNECTION DETAIL 712 | DATE 6-12-67

REVISIONS

6-30-67
7-17-68

For SECTION X-X, Y-Y
See dwg. 6-AB1-234

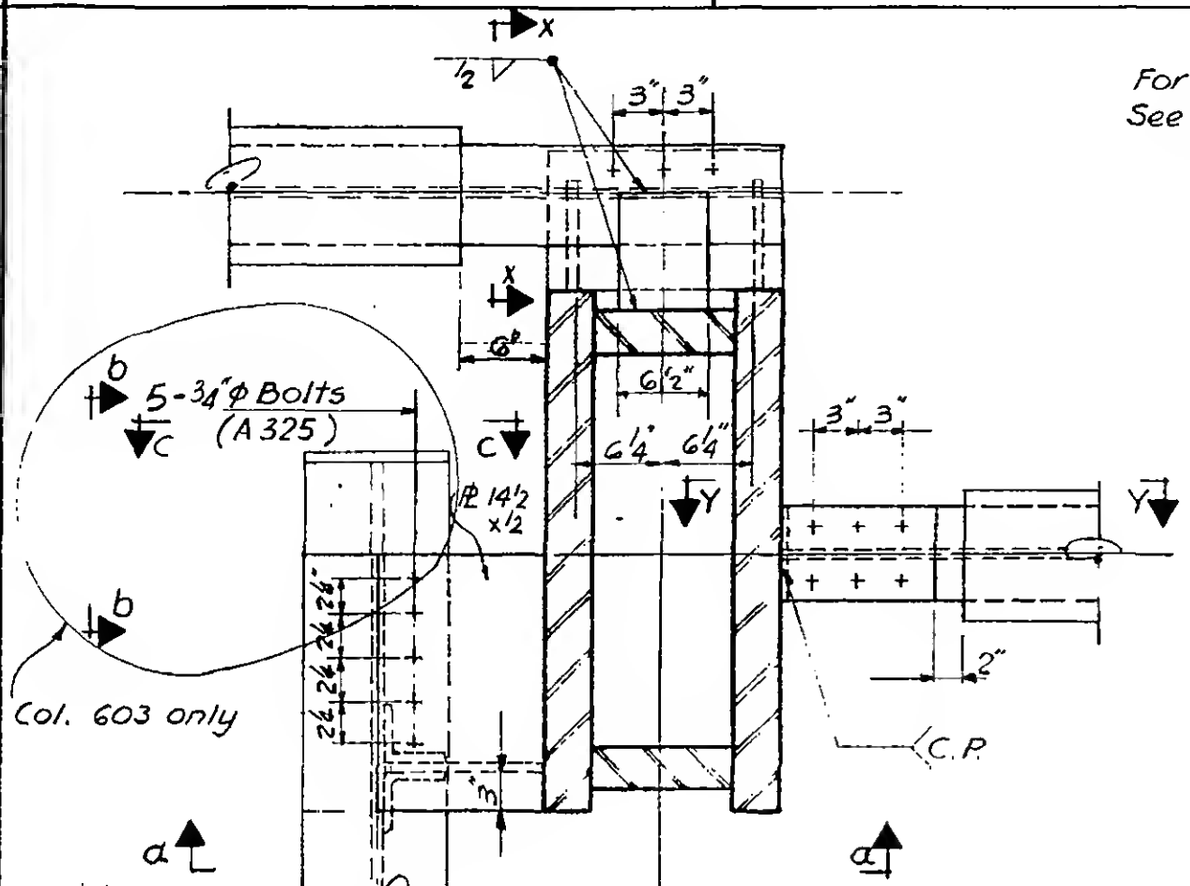

PLAN

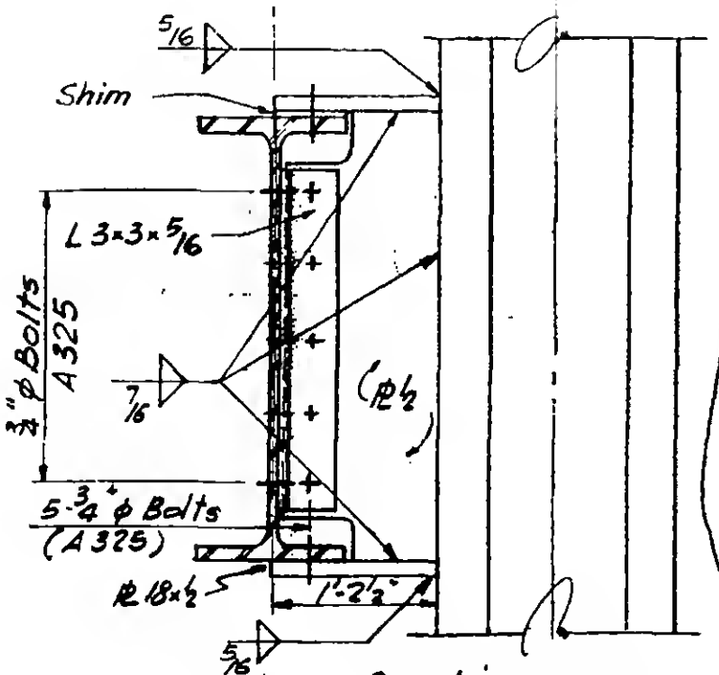

Section a-a

	SECTION X-X	SECTION Y-Y
PLATES		
PL P	2 PLs 7"x 5/8"	6"x 5/8"
PL Q	10 1/2"x 5/8"x 1'-4"	7"x 3/4"
PL R	8"x 5/8"	7"x 3/4"
DIMENSIONS		
A	2'-2 1/4"	0'-10 3/4"
B	1'-0"	1'-0"
BOLTS		
K	—	6-1"φ (A490)
L	3-1"φ (A325)	6-1"φ (A490)
WELDS		
①	7/16	1/2
②	7/16	1/2
③	—	C.P.
④	1/2	—

Revision after fabrication Tower A only

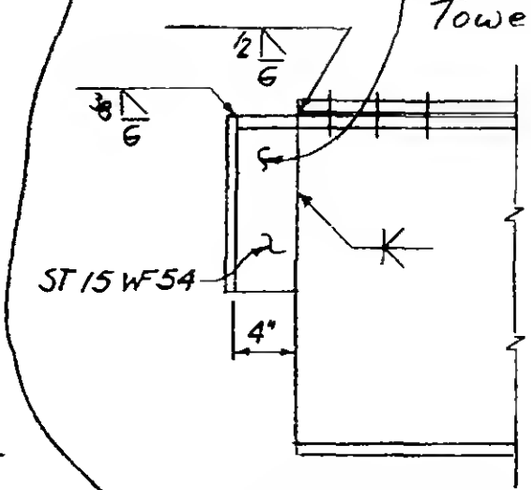

Section b-b

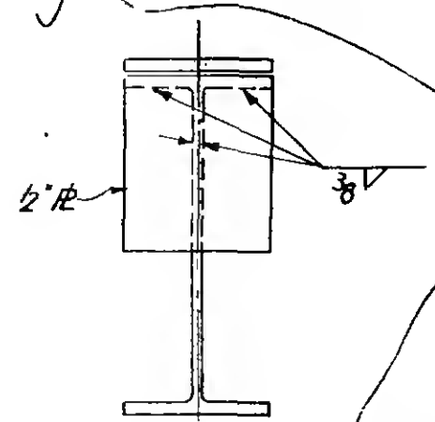

Section c-c

6-AB1-218

LICENSED PROFESSIONAL ENGINEER
LESLIE E. ROBERTSON
No. 34360
UNIVERSITY OF THE STATE OF NEW YORK