WORTHINGTON, SKILLING, HELLE & JACKSON — Civil & Structural Engineers

PROJECT: THE WORLD TRADE CENTER | TITLE: CONNECTION DETAIL 714 | DATE: 6-12-67

REVISIONS

6-30-67

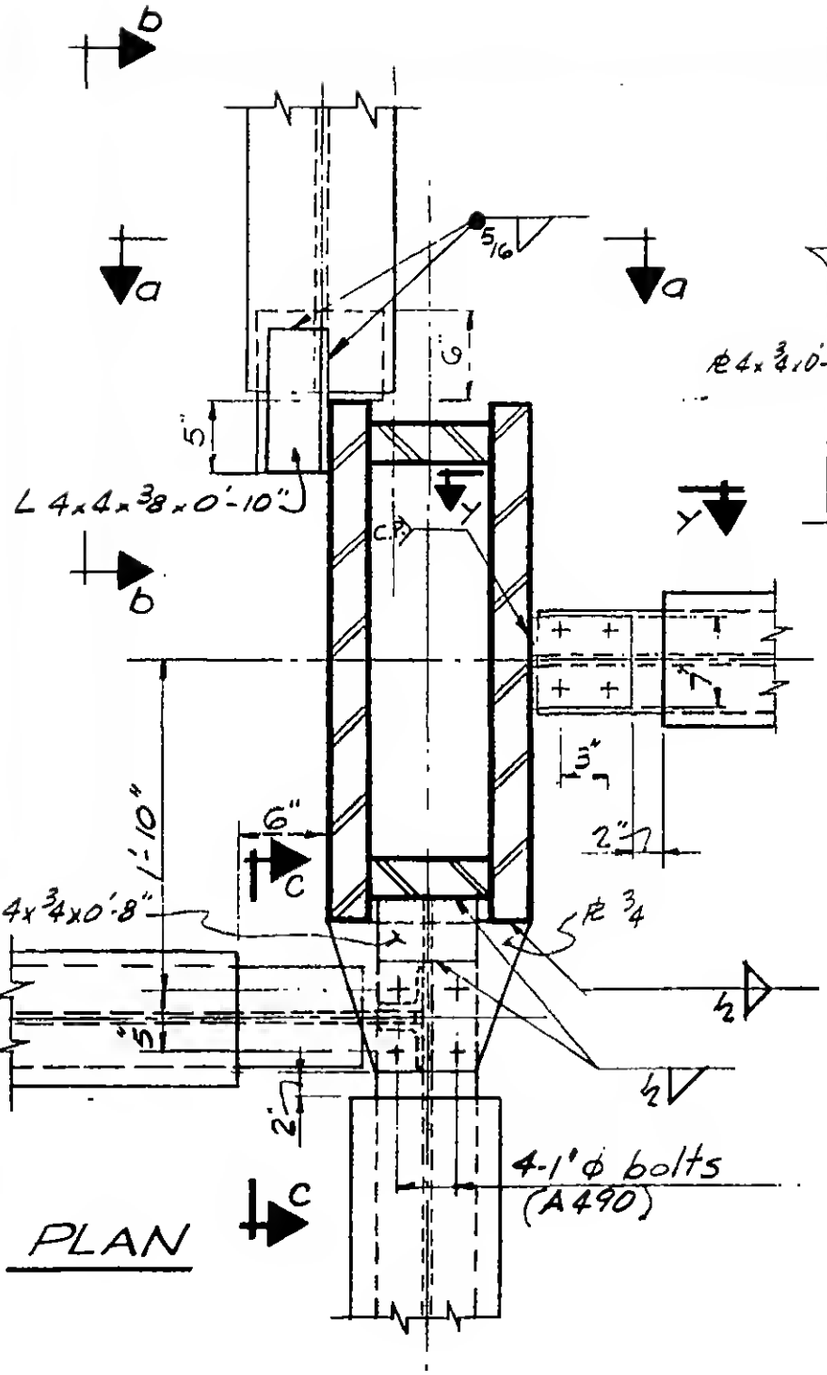

PLAN

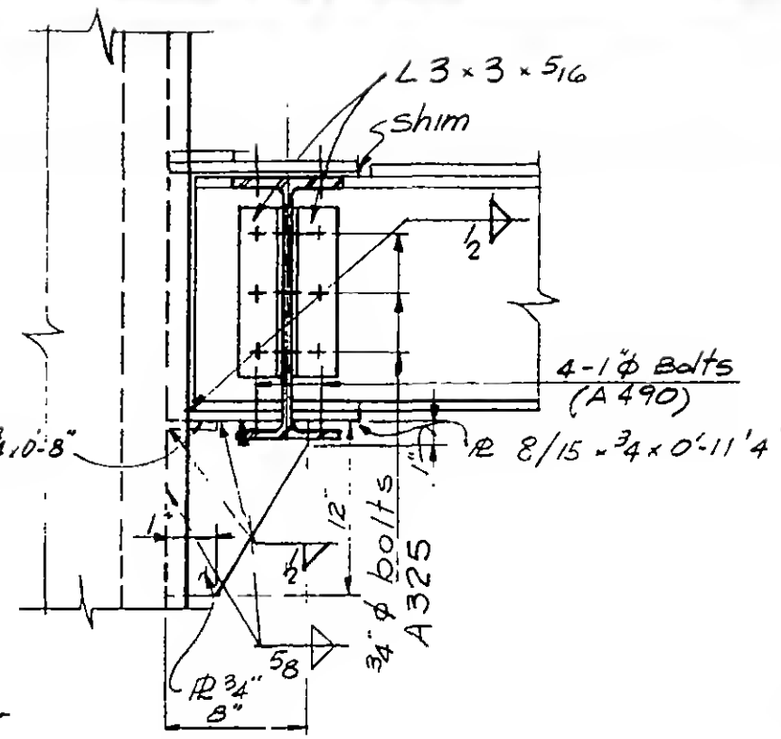

SECTION C-C

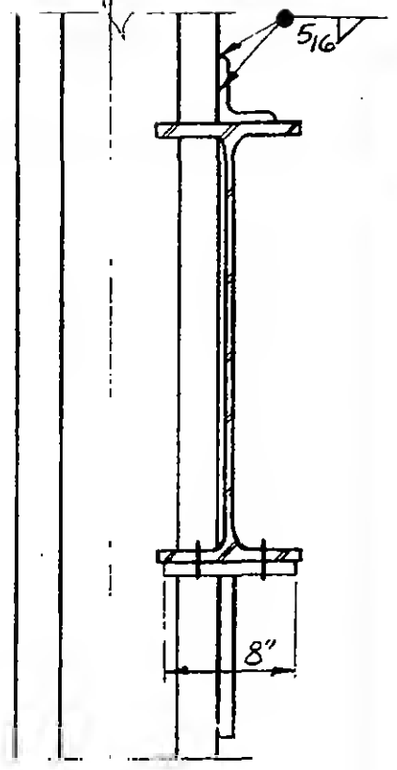

SECTION a-a

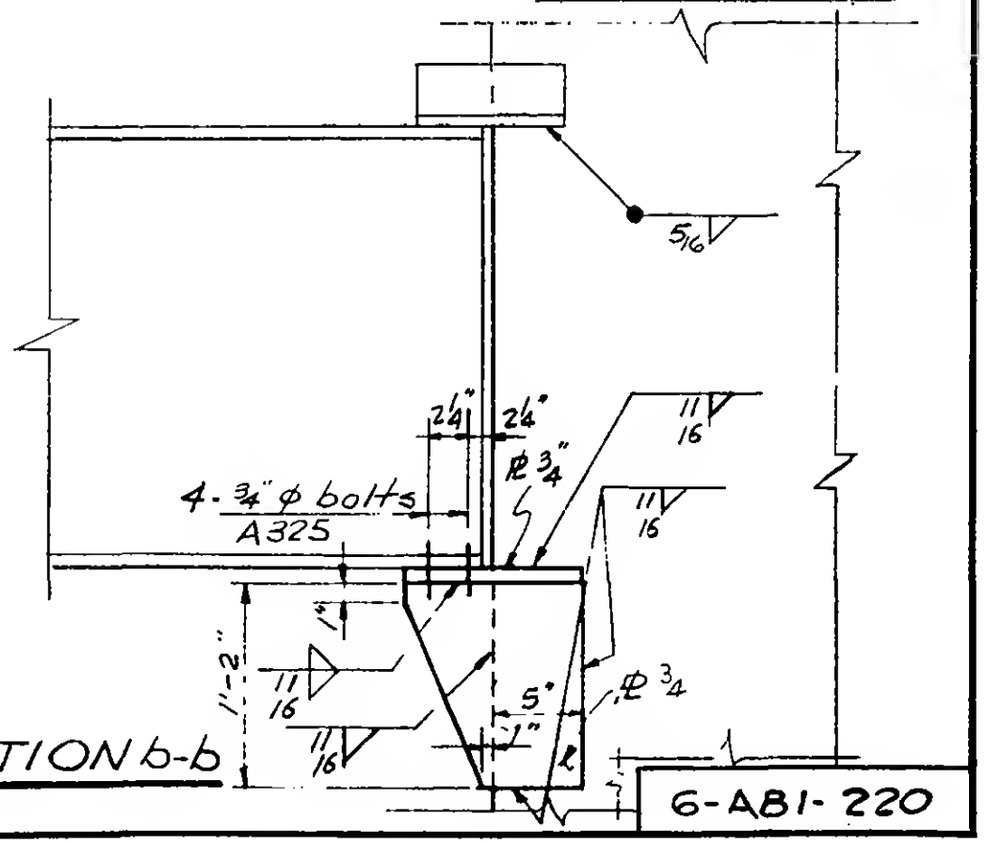

SECTION b-b

For SECTION Y-Y see dwg. 6-AB1-234
For TOWER B see dwg. 6-AB1-220.1

LICENSED PROFESSIONAL ENGINEER — LESLIE E. ROBERTSON — No. 34360 — UNIVERSITY OF THE STATE OF NEW YORK

6-AB1-220