WORTHINGTON, SKILLING, HELLE & JACKSON — Civil & Structural Engineers

PROJECT THE WORLD TRADE CENTER | TITLE CONNECTION DETAIL 715 | DATE 6-12-67

REVISIONS

6-30-67

For section Z-Z, Z₁-Z₁
See Dwg. 6-AB1-234

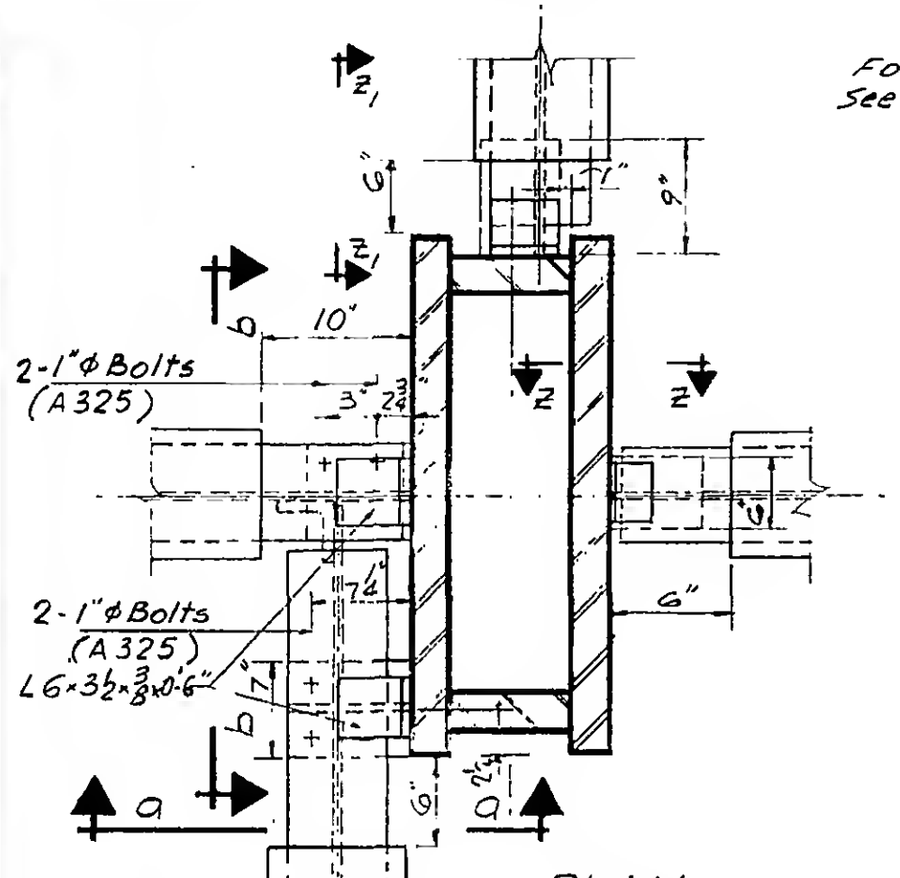

	SECTION Z-Z	SECTION Z₁-Z₁
PLATES		
PL P	5½"×½"	6"×⅜"
PL Q	6¼"×½"	6"×½"
DIMENSIONS		
A	0'-9¼"	1'-8¾"
B	1'-0"	0'-10"
BOLTS		
L	4-¾"ϕ (A325)	2-1"ϕ (A325)
WELDS		
①	⅜	¼
②	⅜	¼
④	7/16	7/16

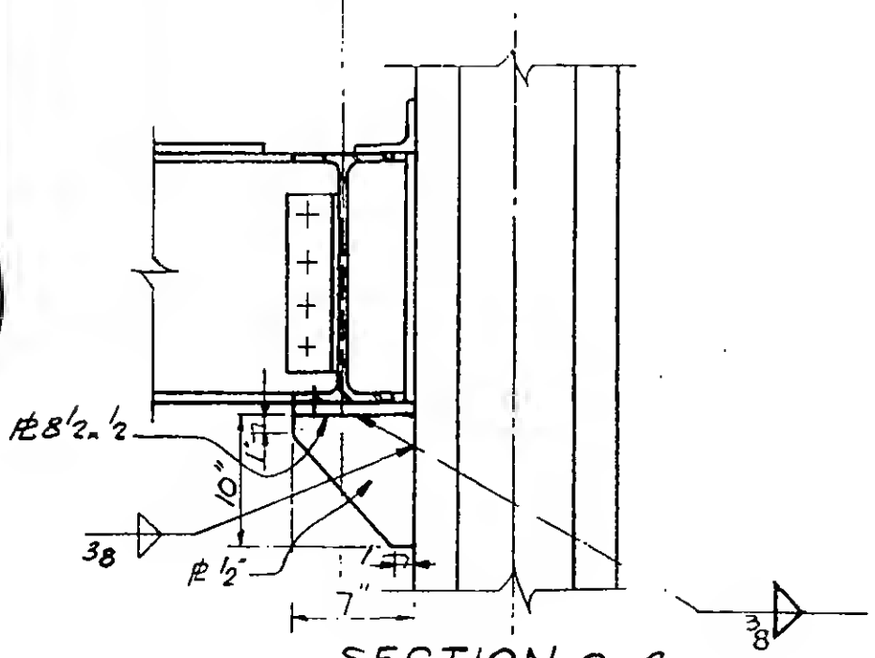

SECTION a-a

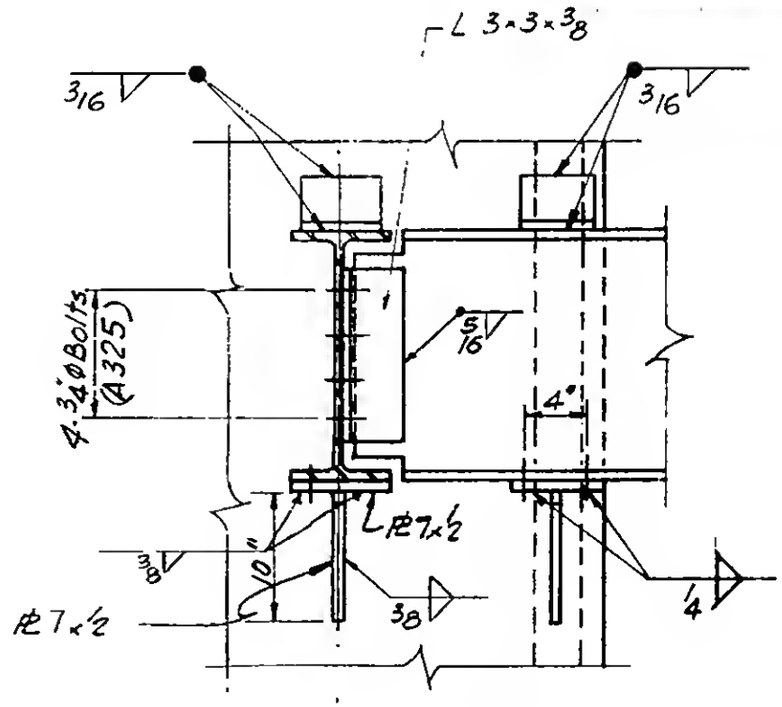

SECTION b-b

LICENSED PROFESSIONAL ENGINEER
LESLIE E. ROBERTSON
No. 34360
UNIVERSITY OF THE STATE OF NEW YORK

6-AB1-221