WORTHINGTON, SKILLING, HELLE & JACKSON — Civil & Structural Engineers

PROJECT: THE WORLD TRADE CENTER | TITLE: CONNECTION DETAIL 7/16 | DATE: 6-12-67

REVISIONS

6-30-67

For SECTION X-X, Y-Y,
See Dwg. 6-AB1-234

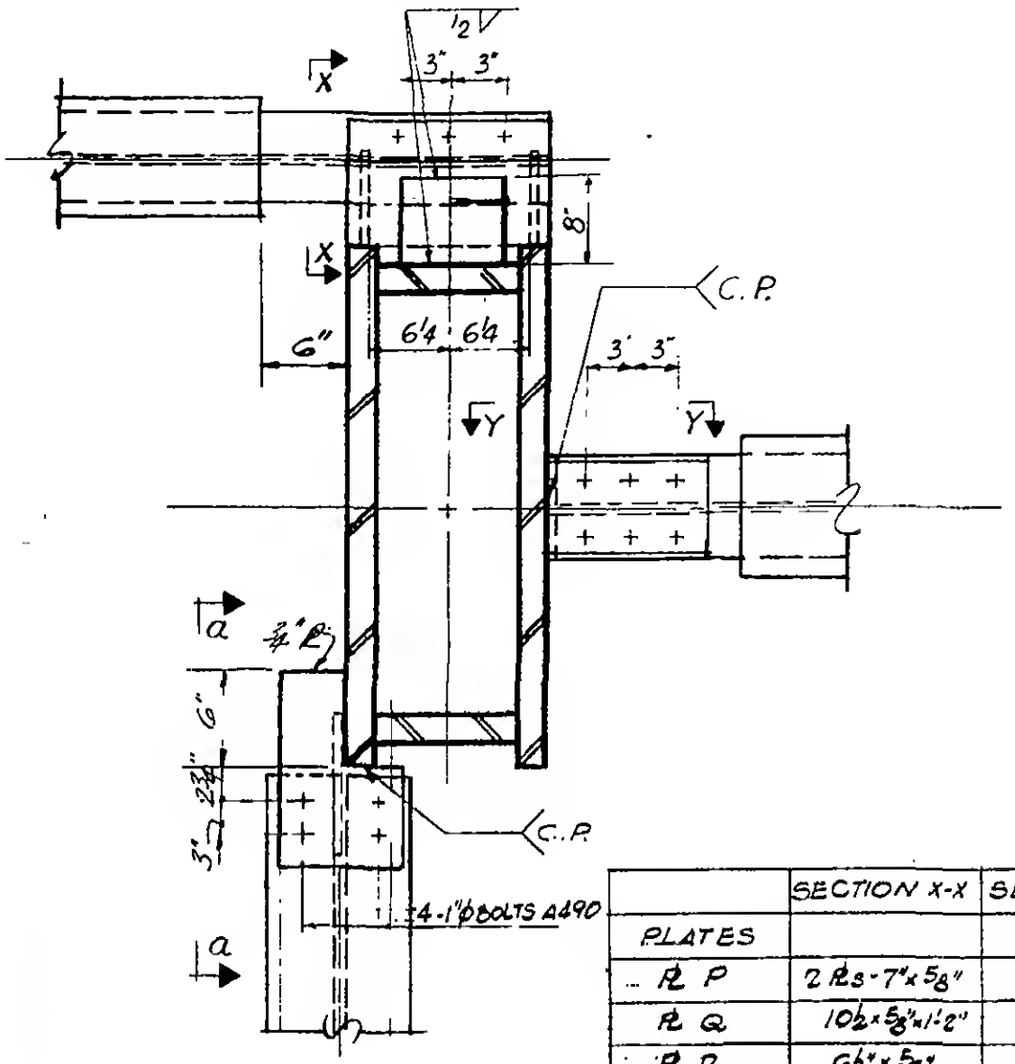

PLAN

	SECTION X-X	SECTION Y-Y
PLATES		
R P	2 Rs-7"x5/8"	6"x5/8"
R Q	10½x5/8"x1'-2"	7"x¾"
R R	6½"x5/8"	7"x¾"
DIMENSIONS		
A	2'-1¾"	0'-9¾"
B	1'-0"	1'-0"
BOLTS		
K	—	6-1"ø (A490)
L	3-1"ø (A325)	6-1"ø (A490)
WELDS		
①	7/16	½
②	7/16	½
③	—	C.P.
⑦	½	—

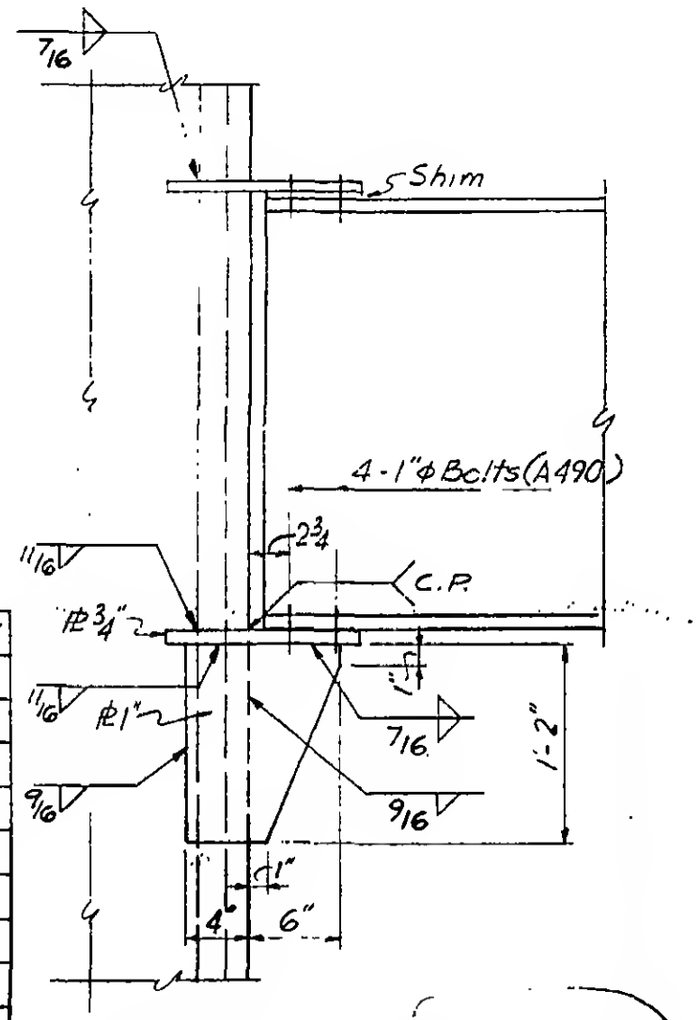

SECTION a-a Tower A only

LICENSED PROFESSIONAL ENGINEER
LESLIE E. ROBERTSON
No. 34360
UNIVERSITY OF THE STATE OF NEW YORK

6-AB1-222