WORTHINGTON, SKILLING, HELLE & JACKSON — Civil & Structural Engineers

PROJECT: THE WORLD TRADE CENTER | TITLE: CONNECTION DETAIL 721 | DATE: 6-12-67

REVISIONS

6-30-67

For SECTIONS Z-Z & Y-Y
See Dwg. 6-AB1-234

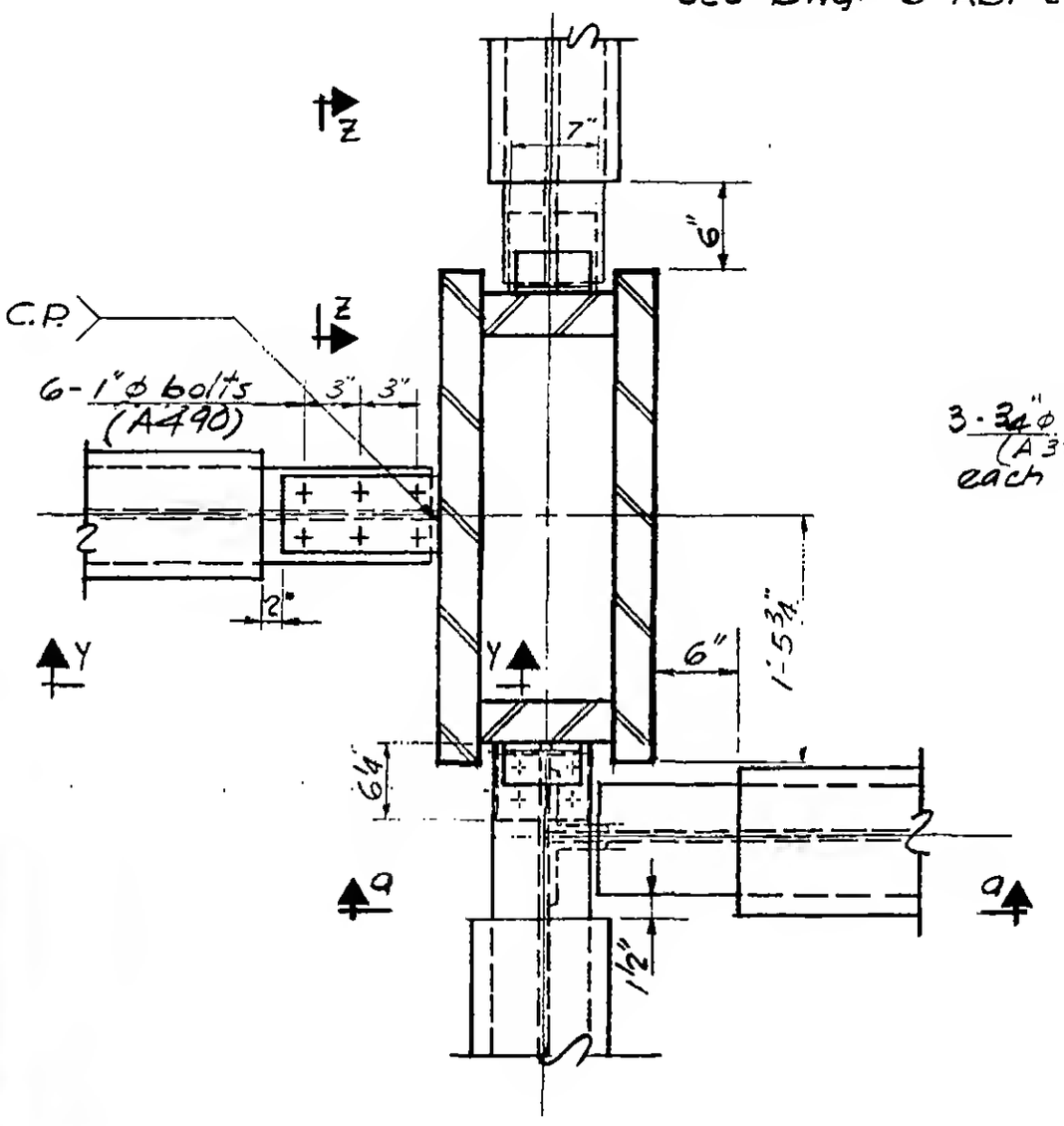

PLAN

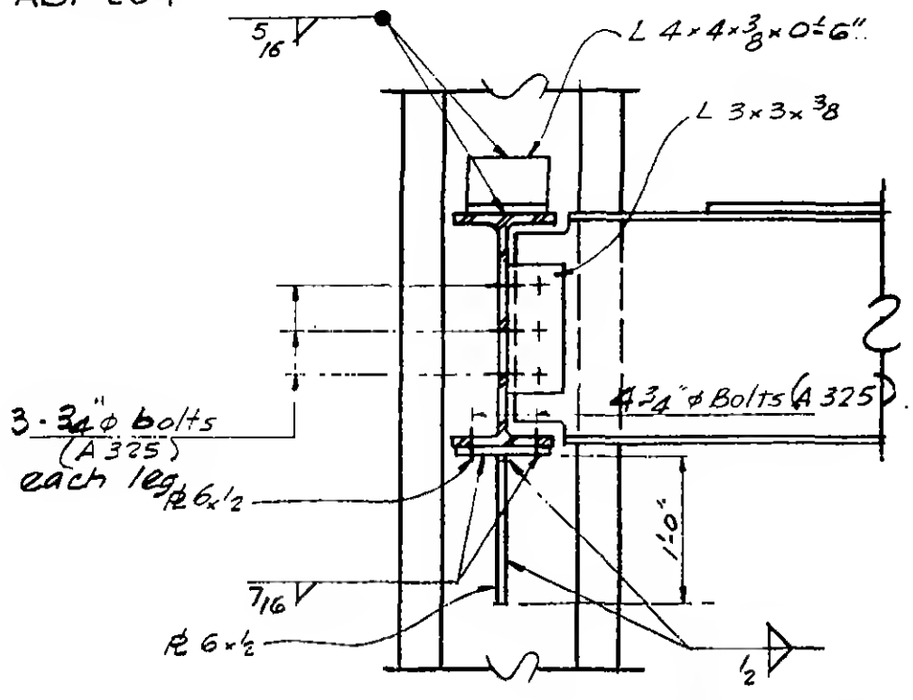

SECTION a-a

	SECTION Y-Y	SECTION Z-Z
PLATES		
PL P	6" × ¾"	4" × ½"
PL Q	7" × ⅞"	6¼" × ½
PL R	7" × ⅞"	—
DIMENSIONS		
A	0'-10¼"	1'-5¾"
B	1'-2"	6¼"
BOLTS		
K	6-1"ø (A490)	—
L	6-1"ø (A490)	4-¾"ø (A325)
WELDS		
①	⅝	⅜
②	⅝	⅜
③	C.P.	—
④	—	7/16

LICENSED PROFESSIONAL ENGINEER
LESLIE E. ROBERTSON
No. 34360
UNIVERSITY OF THE STATE OF NEW YORK

6-AB1-221