WORTHINGTON, SKILLING, HELLE & JACKSON — Civil & Structural Engineers

PROJECT: THE WORLD TRADE CENTER | TITLE: CONNECTION DETAIL 722 | DATE: 6-12-67

REVISIONS

6-30-67

For SECTIONS Z-Z, Z1-Z1 & Z2-Z2
See Dwg. G-AB1-234

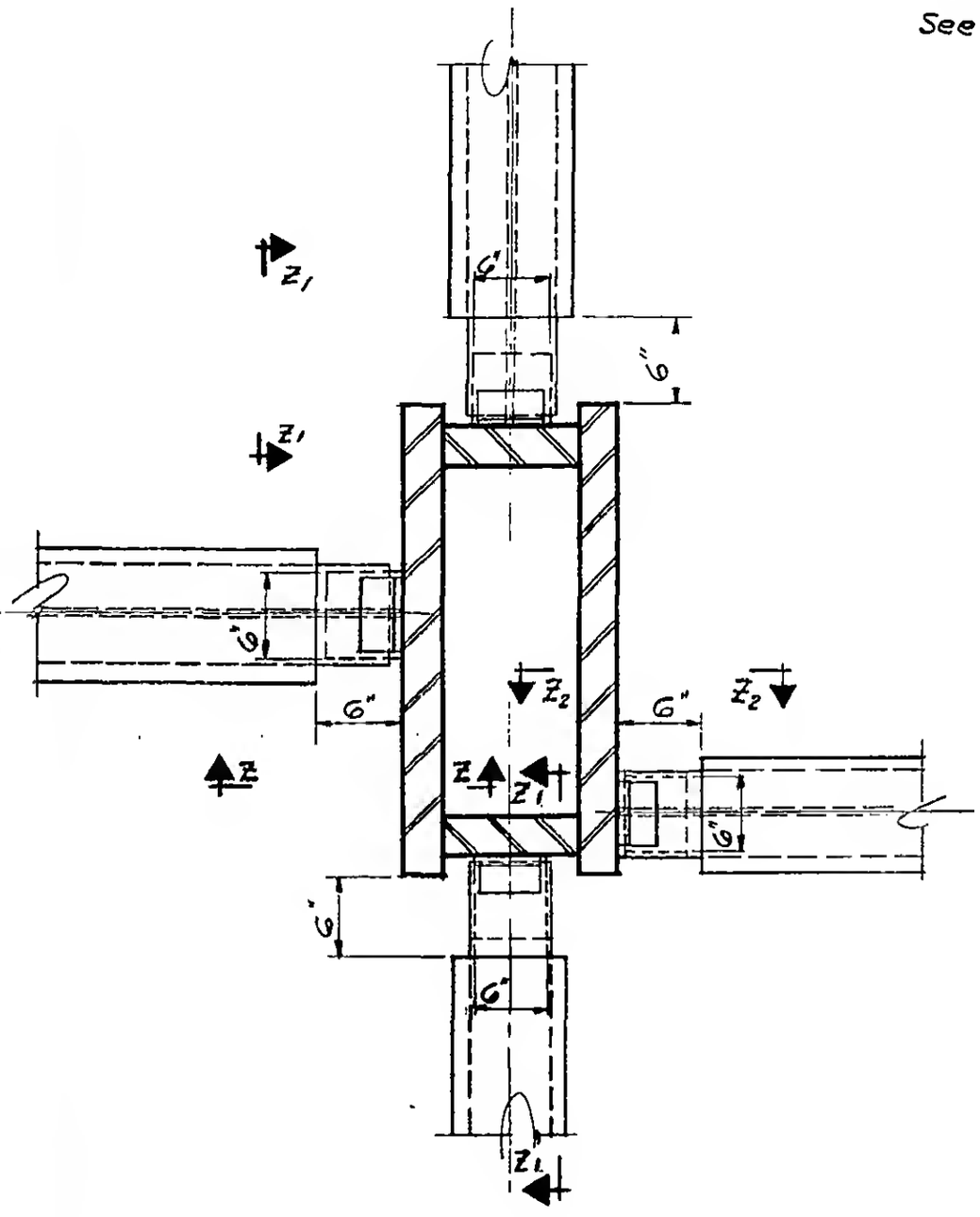

PLAN

	SECTION Z-Z	SECTION Z1-Z1	SECTION Z2-Z2
PLATES			
ℛ P	6"x 5/8"	5"x 1/2"	4"x 1/2"
ℛ Q	6 1/4"x 5/8"	6 1/4"x 1/2"	6 1/4"x 1/2"
DIMENSIONS			
A	0'-10 1/4"	1'-5 3/4"	0'-10 1/4"
B	0'-10"	0'-9"	0'-6"
BOLTS			
L	4-3/4" ϕ (A325)	4-3/4" ϕ (A325)	4-3/4" (A-325)
WELDS			
(1)	1/2	3/8	3/8
(2)	1/2	3/8	3/8
(4)	7/16	7/16	7/16

LICENSED PROFESSIONAL ENGINEER
LESLIE E. ROBERTSON
No. 34360
UNIVERSITY OF THE STATE OF NEW YORK

G-AB1-228