WORTHINGTON, SKILLING, HELLE & JACKSON — Civil & Structural Engineers

PROJECT: THE WORLD TRADE CENTER | TITLE: CONNECTION DETAIL 725 | DATE: 6-12-67

REVISIONS

6-30-67

For section Z-Z see Dwg. 6-AB1-234

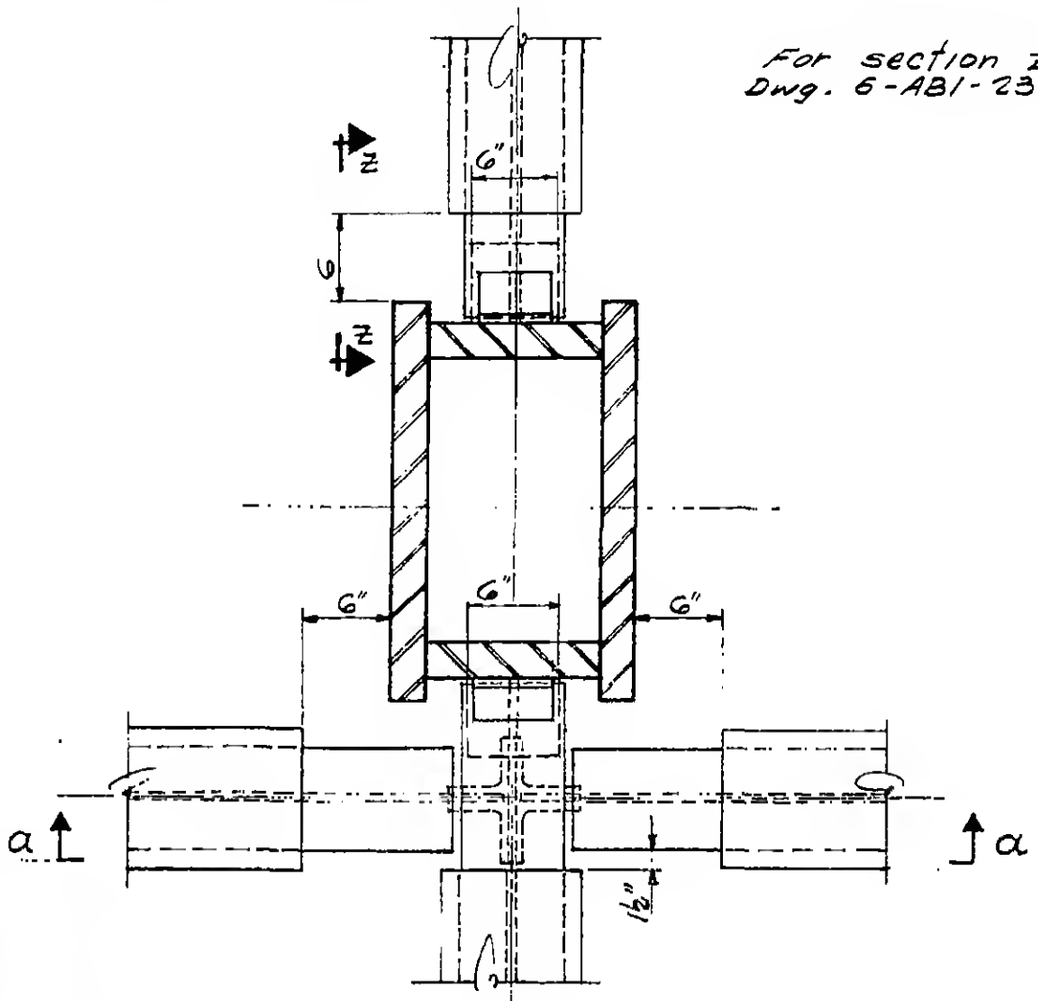


PLAN

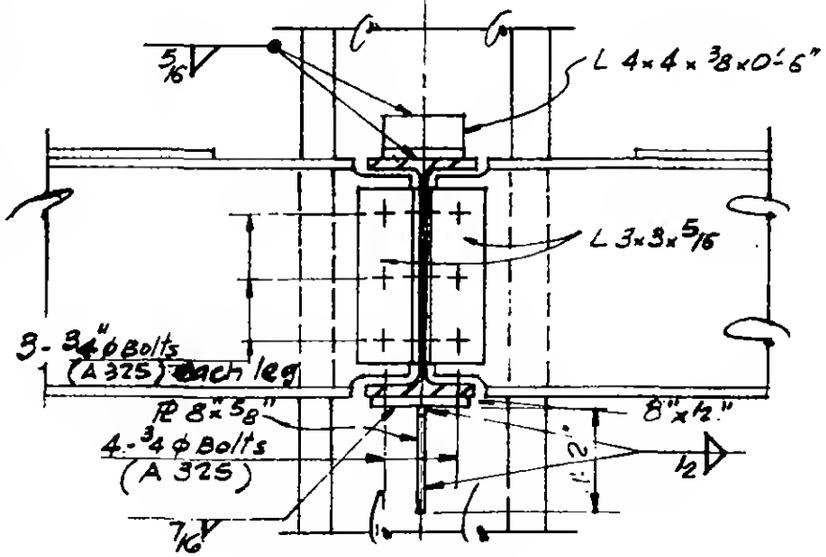


SECTION a-a

| | SECTION Z-Z |
|---|---|
| PLATES | |
| PL P | 5"×½" |
| PL Q | 6¼"×½" |
| | |
| DIMENSIONS | |
| A | 1'-2¼" |
| B | 0'-10" |
| | |
| BOLTS | |
| L | 4-¾ϕ (A325) |
| | |
| WELDS | |
| ① | 5/16 |
| ② | 5/16 |
| ④ | 7/16 |

LICENSED PROFESSIONAL ENGINEER — LESLIE E. ROBERTSON — No. 34360 — UNIVERSITY OF THE STATE OF NEW YORK

6-AB1-231