WORTHINGTON, SKILLING, HELLE & JACKSON — Civil & Structural Engineers

PROJECT THE WORLD TRADE CENTER | TITLE CONNECTION DETAIL 726 | DATE 6-12-67

REVISIONS

6-30-67

For section X-X, Z-Z, Z_1-Z_1,
See Dwg. 6-AB1-234

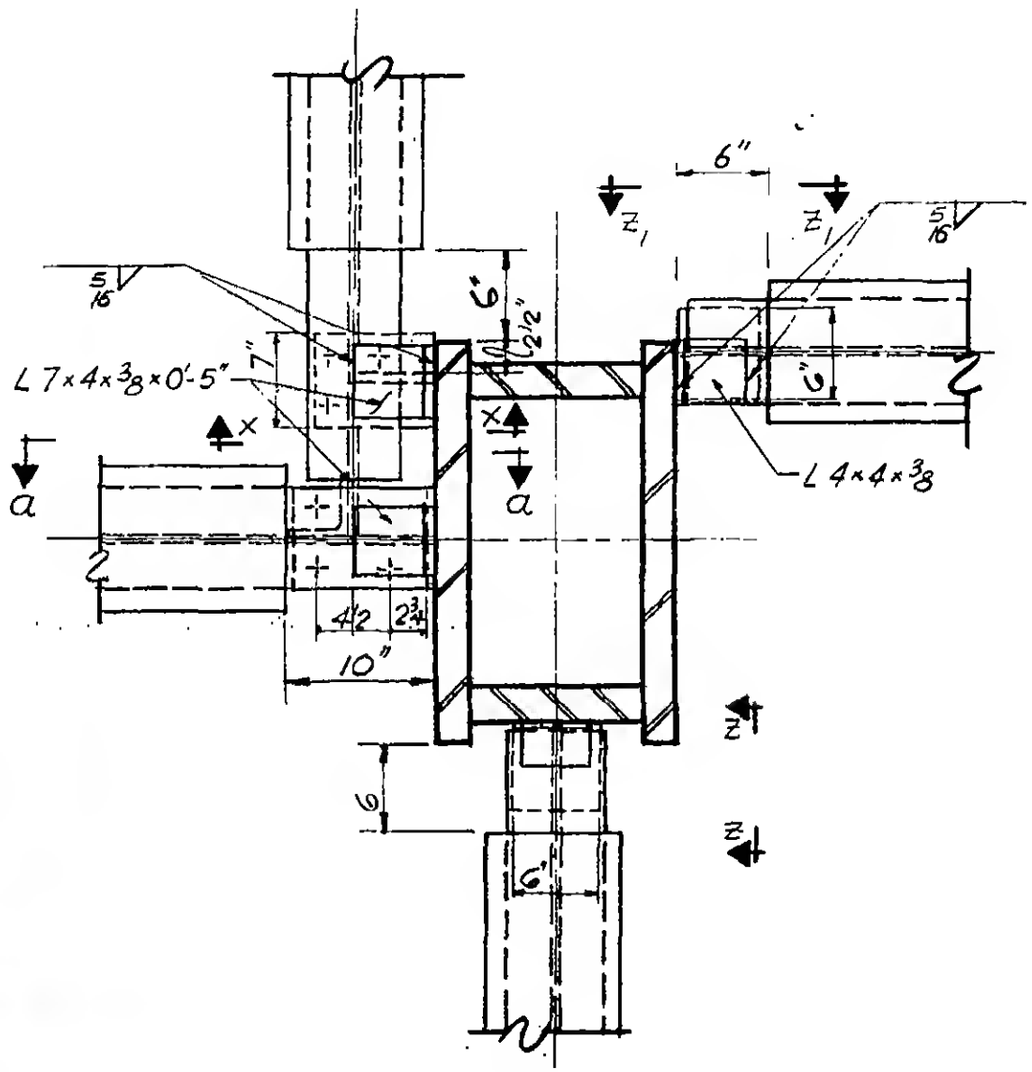

PLAN

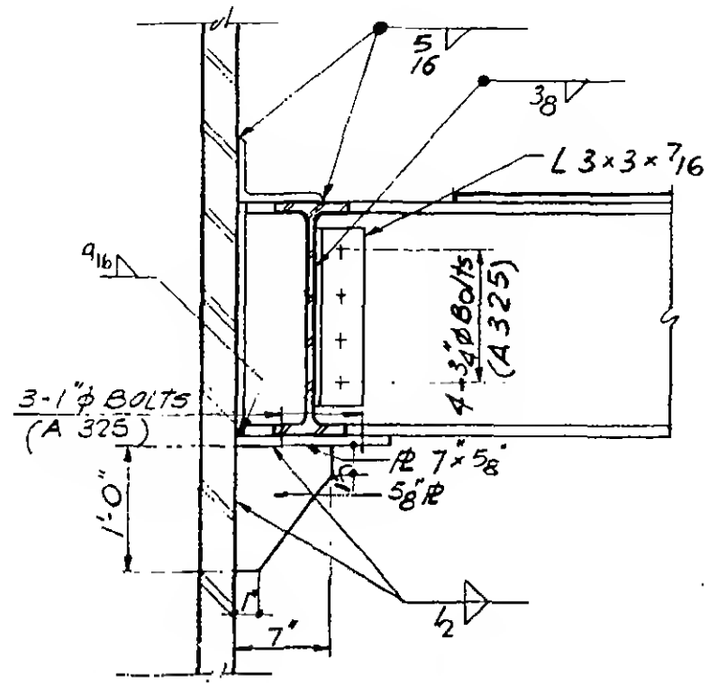

SECTION a-a

	SECTION X-X	SECTION Z-Z	SECTION Z_1-Z_1
PLATES			
PL P	7½"×½"	5"×½"	5"×½"
PL Q	½"	6¼"×½"×0'-6"	6¼"×½"
DIMENSIONS			
A	1'-0¾"	1'-2¼"	0'-10¾"
B	0'-11"	0'-8"	0'-8"
BOLTS			
L	3-1"ø (A325)	4-¾"ø (A325)	4-¾ (A325)
WELDS			
①	3/8	5/16	5/16
②	3/8	5/16	5/16
③	—	—	C.P.
④	7/16	7/16	—

LICENSED PROFESSIONAL ENGINEER
LESLIE E. ROBERTSON
No. 34360
STATE OF NEW YORK

6-AB1-232