SKILLING - HELLE - CHRISTIANSEN - ROBERTSON Structural & Civil Engineers

PROJECT THE WORLD TRADE CENTER | TITLE CONNECTION DETAIL 730 | DATE 8-14-67

REVISIONS

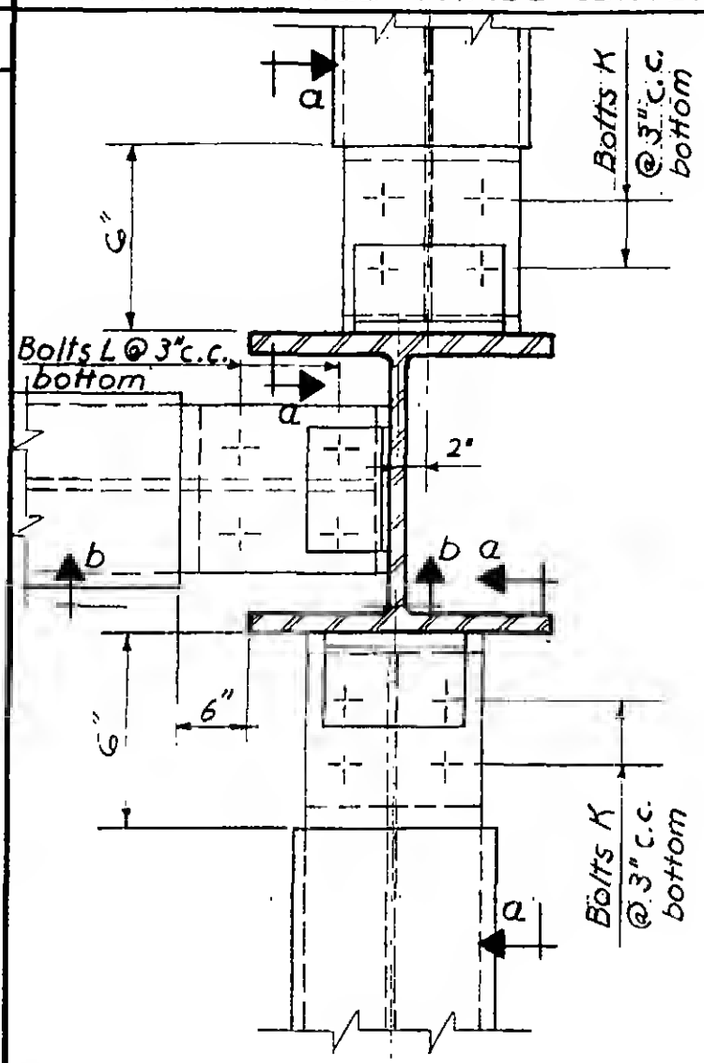

Plan

SCHEDULE		
	sect. a-a	sect. b-b
PLATES		
P	3/4"	3/4"
Q	3/4"	3/4"
DIMENSIONS		
A	1'-3"	—
B	—	1'-2"
BOLTS		
K	4 - 7/8" ϕ	—
L	—	4 - 3/4" ϕ
WELDS		
②	5/16	5/16

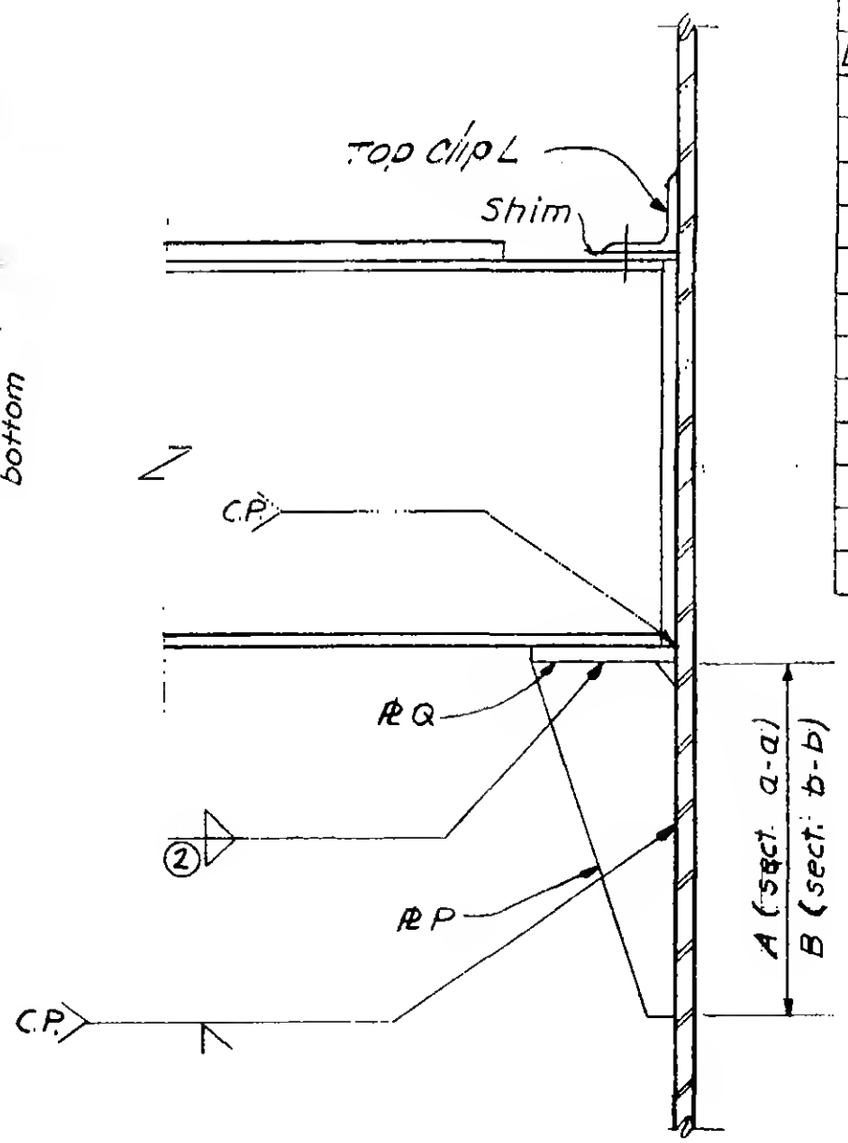

Section a-a
Section b-b

6-AB1-237