SKILLING - HELLE - CHRISTIANSEN - ROBERTSON  Structural & Civil Engineers

PROJECT THE WORLD TRADE CENTER | TITLE CONNECTION DETAIL 732 | DATE 8-14-67

REVISIONS

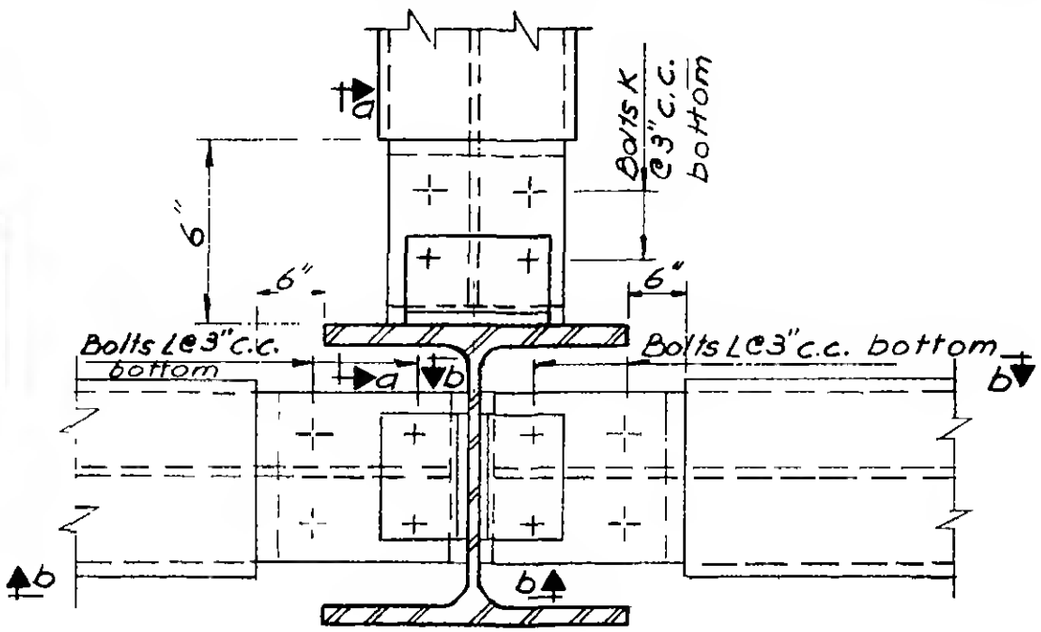


Plan

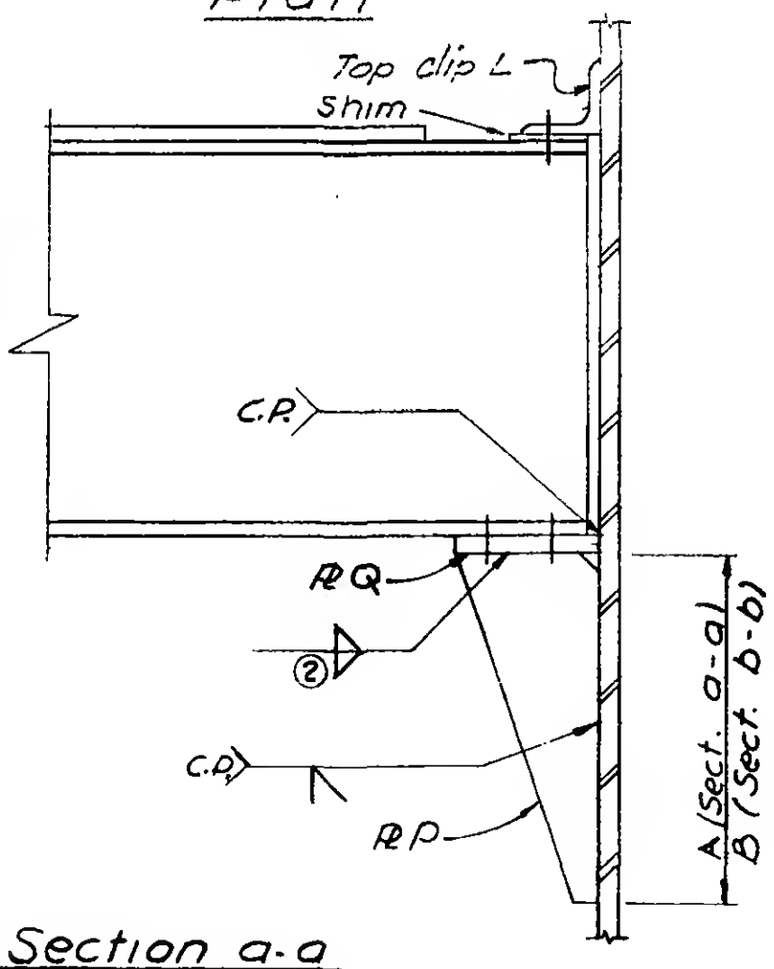


Section a-a
Section b-b

## SCHEDULE

| | Section a-a | Section b-b |
|---|---|---|
| PLATES | | |
| P | 3/4" | 3/4" |
| Q | 3/4" | 3/4" |
| | | |
| | | |
| | | |
| | | |
| DIMENSIONS | | |
| A | 1'-3" | — |
| B | — | 1'-5" |
| | | |
| | | |
| BOLTS | | |
| K | 4-7/8"ϕ | — |
| L | — | 4-3/4"ϕ |
| | | |
| | | |
| WELDS | | |
| | | |
| ② | 5/16 | 5/16 |
| | | |
| | | |

LICENSED PROFESSIONAL ENGINEER
LESLIE E. ROBERTS
UNIVERSITY OF ILLINOIS

G-ABI-239