SKILLING - HELLE - CHRISTIANSEN - ROBERTSON Structural & Civil Engineers

PROJECT THE WORLD TRADE CENTER | TITLE CONNECTION DETAIL 751 A, B, C, D, E, F | DATE 8-14-67

REVISIONS
2-9-68

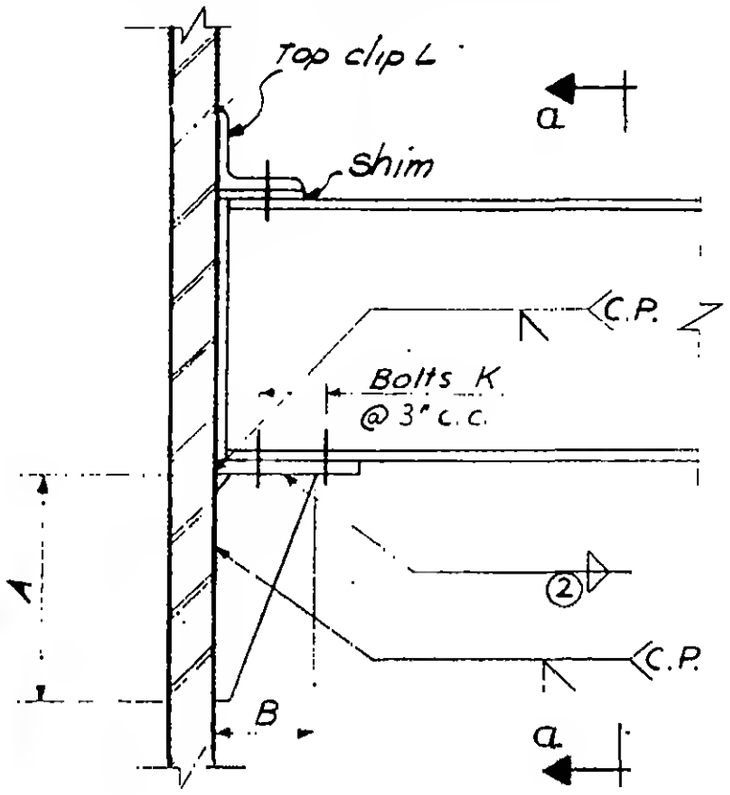

Elevation

See 1-AB3-249.1 for Plan 751 D

SCHEDULE

	751 A	751 B,D,F	751 C,E
PLATES			
P	½"	½"	1"
Q	½"	½"	1"
DIMENSIONS			
A	0'-10"	1'-0"	1'-2"
B	0'-4½"	0'-4½"	0'-6"
BOLTS			
K	4 - ⅞" ϕ	4 - 1⅛" ϕ	4 - ⅞" ϕ
WELDS			
②	5/16	5/16	- 3/8

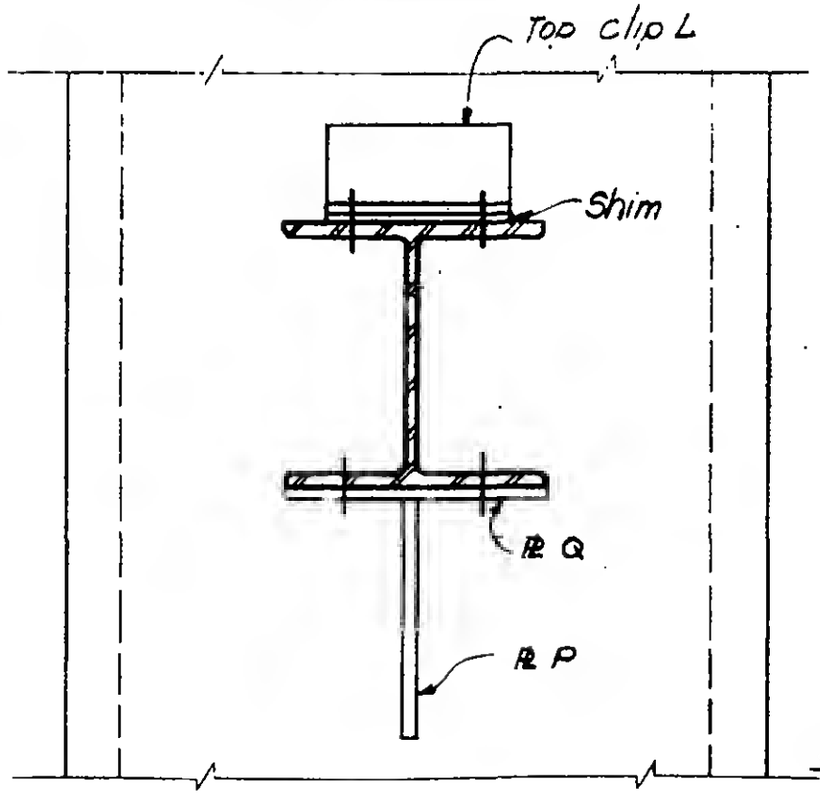

Section a-a

LICENSED PROFESSIONAL ENGINEER
LESLIE E. ROBERTSON
No. 34360
STATE OF NEW YORK

6-AB1-249