SKILLING - HELLE - CHRISTIANSEN - ROBERTSON Structural & Civil Engineers

PROJECT THE WORLD TRADE CENTER | TITLE CONNECTION DETAIL 752 A&B, 757A&B, 760A,B,D-G | DATE 8-14-67

REVISIONS

12-21-67

2-9-68

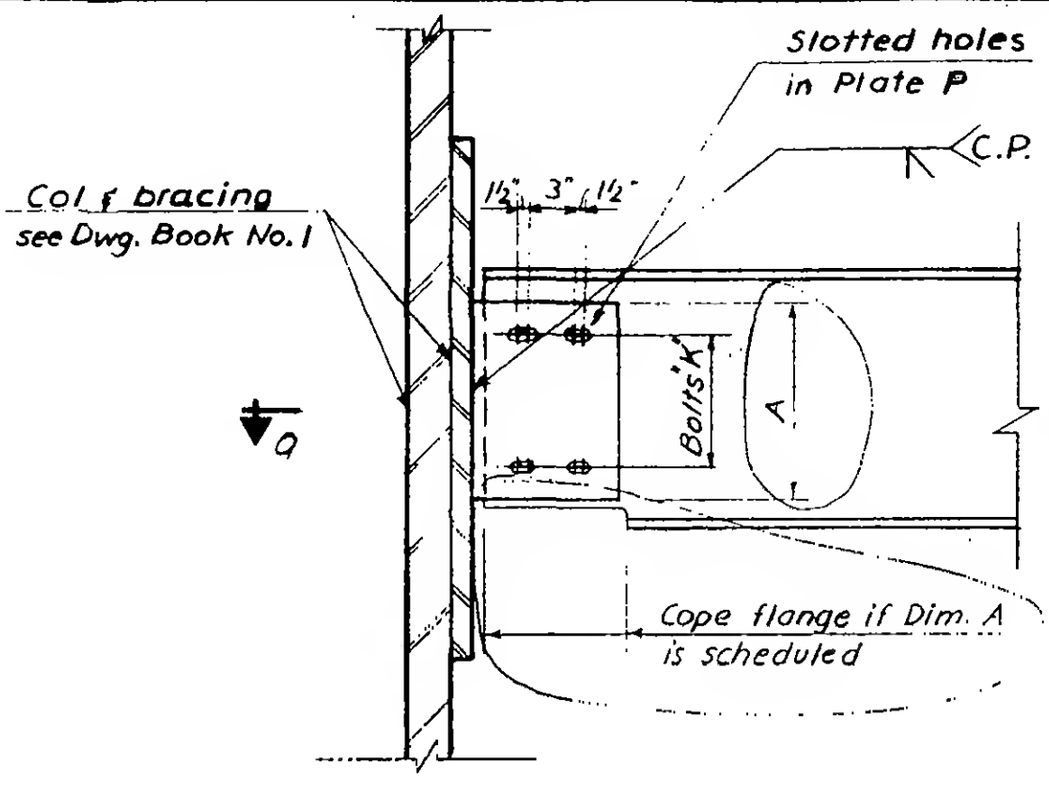

Elevation

SCHEDULE			
	A, E	B, F	D, G
PLATES			
P	¾"	¾"	¾"
DIM. A	—	—	1'-0"
BOLTS			
K	4 - 1" ϕ	6 - 1⅛" ϕ	6 - 1⅛" ϕ

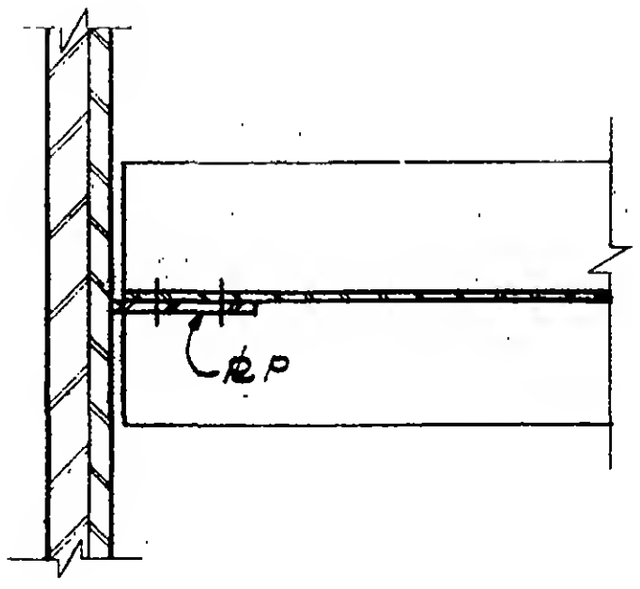

Section a-a

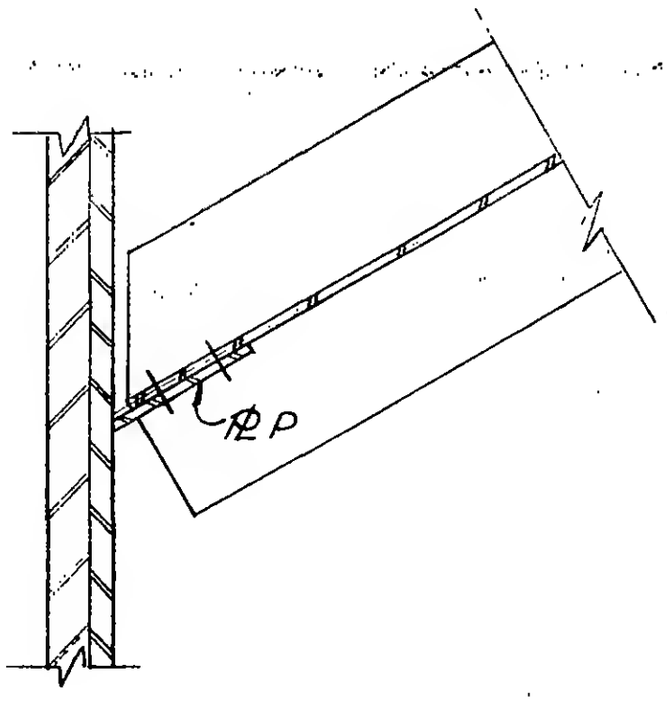

Section a-a
see plan for location

LICENSED PROFESSIONAL ENGINEER
LESLIE E. ROBERTSON
No. 34360
STATE OF NEW YORK

6-AB1-250