SKILLING - HELLE - CHRISTIANSEN - ROBERTSON Structural & Civil Engineers

PROJECT THE WORLD TRADE CENTER | TITLE CONNECTION DETAIL 756 A.B | DATE 8-14-67

REVISIONS

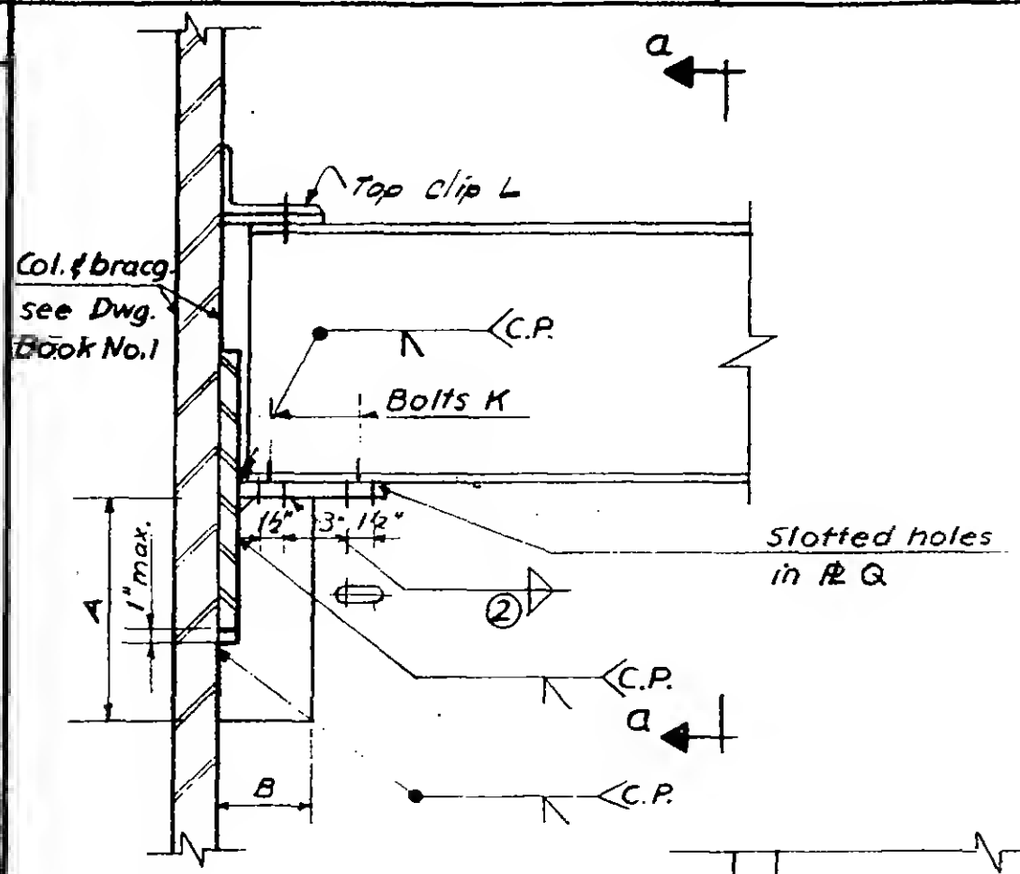

Elevation

SCHEDULE		
	756 A	756 B
PLATES		
P	1/2"	5/8"
Q	1/2"	5/8"
DIMENSIONS		
A	0'-10"	1'-1"
B	0'-5 1/2"	0'-5 1/2"
BOLTS		
K	4 - 3/4" ϕ	4 - 1 1/8" ϕ
WELDS		
②	5/16	5/16

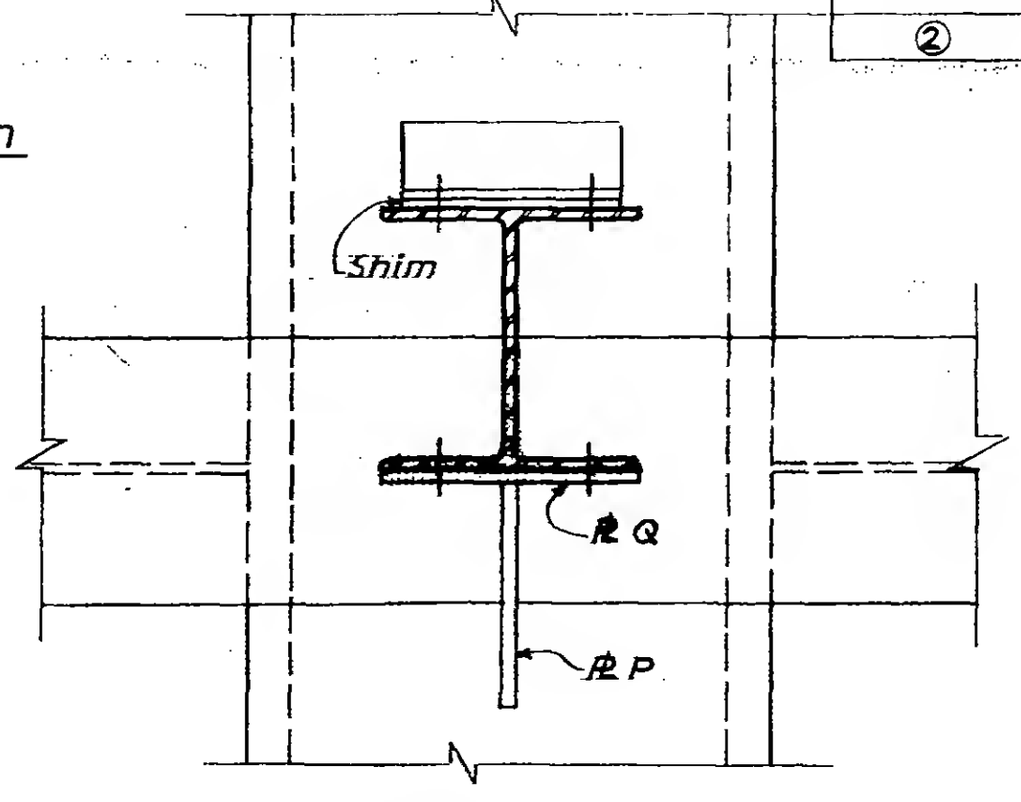

Section a-a

LICENSED PROFESSIONAL ENGINEER LESLIE E. ROBERTSON No. 34360 UNIVERSITY OF THE STATE OF NEW YORK

6-ABI-254