SKILLING - HELLE - CHRISTIANSEN - ROBERTSON Structural & Civil Engineers

PROJECT THE WORLD TRADE CENTER | TITLE CONNECTION DETAIL 761 A & B | DATE 8-14-67

REVISIONS

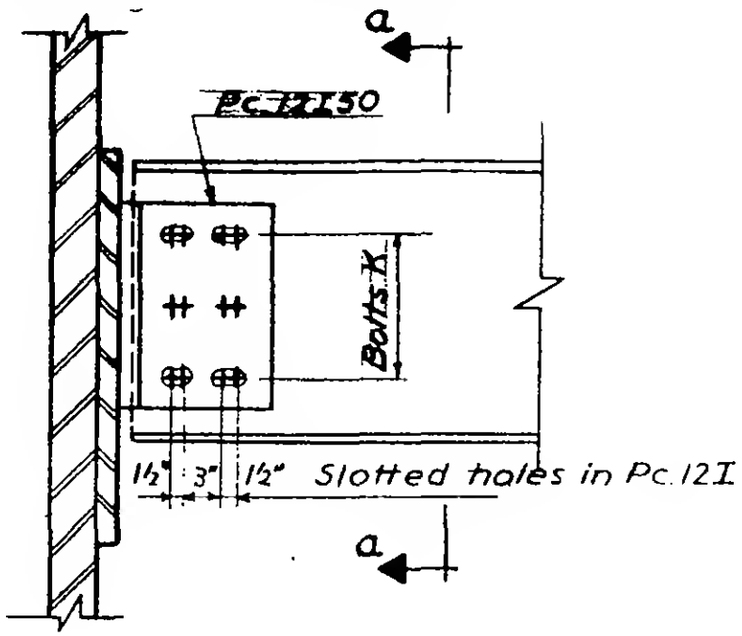

Elevation

SCHEDULE		
	761 A	761 B
BOLTS		
K	4 - 1" ϕ	6 - 1⅛" ϕ
WELDS		
①	5/16	3/8

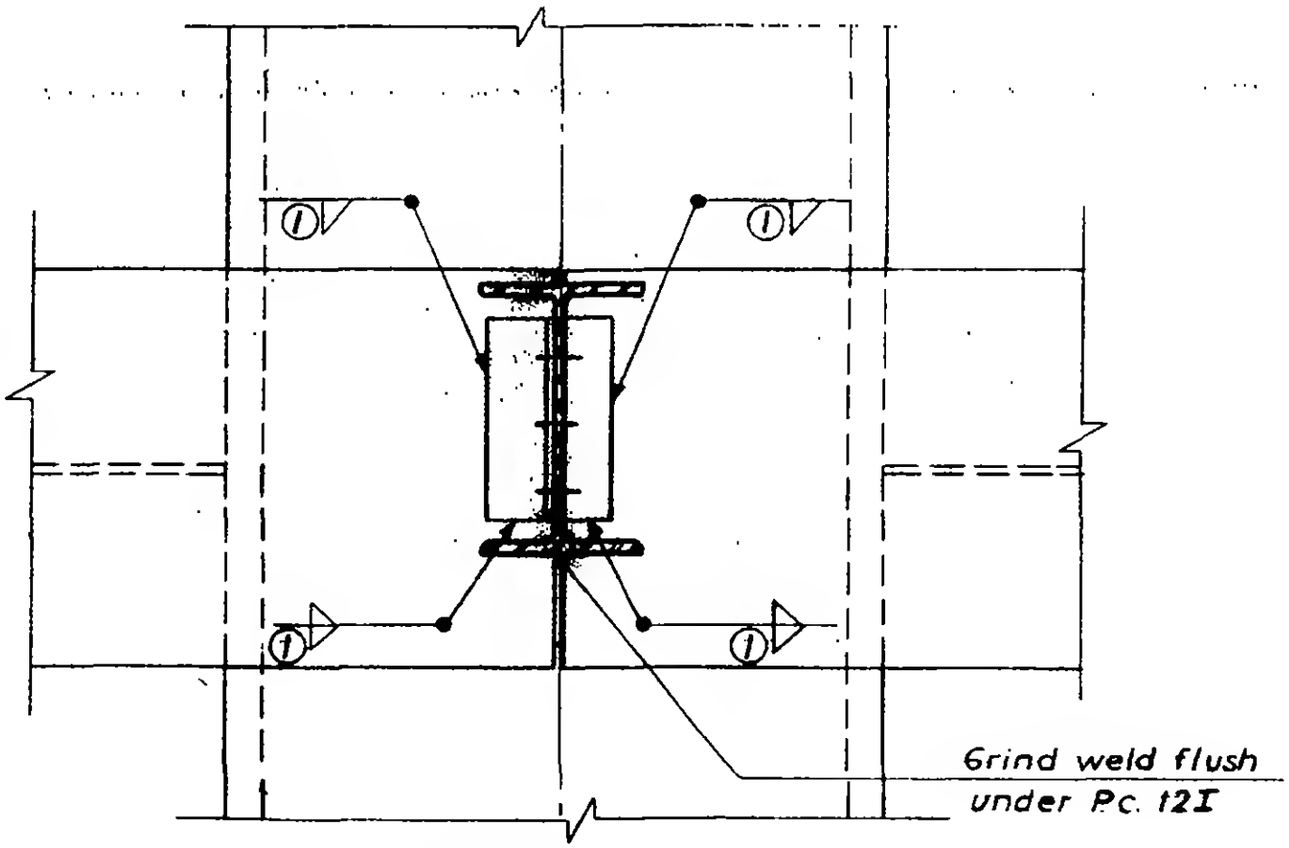

Section a-a

LESLIE E. ROBERTSON
No. 34360
STATE OF NEW YORK

6-ABL-257